2-GATES FISH PROTECTION DEMONSTRATION PROJECT

BACON ISLAND, CALIFORNIA

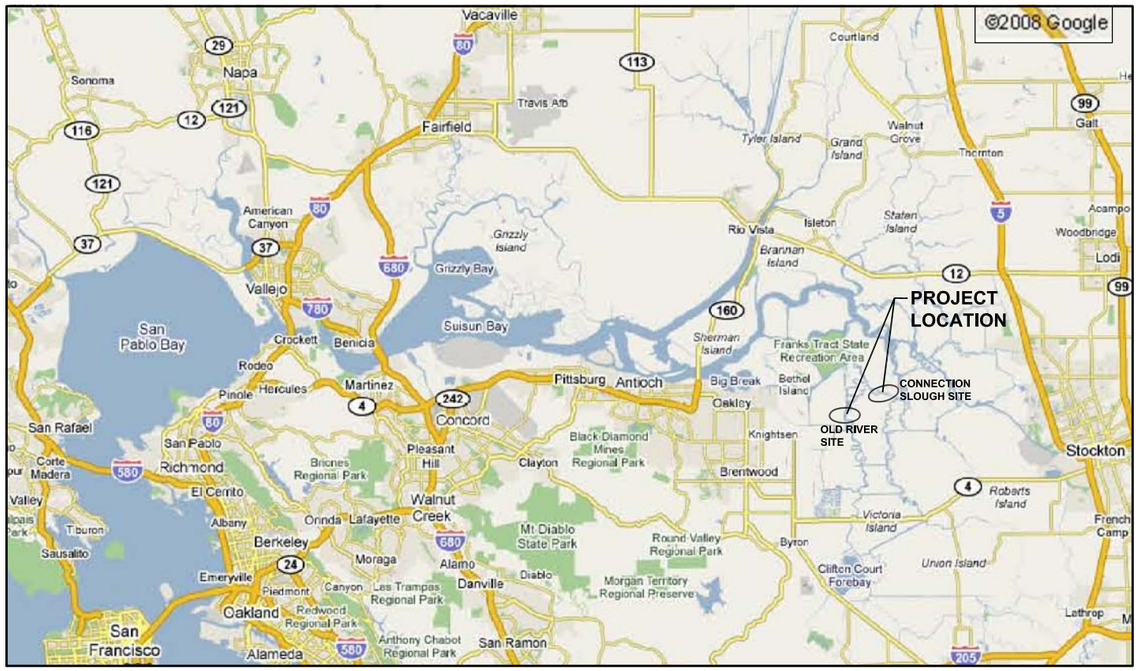

VICINITY MAP
NTS

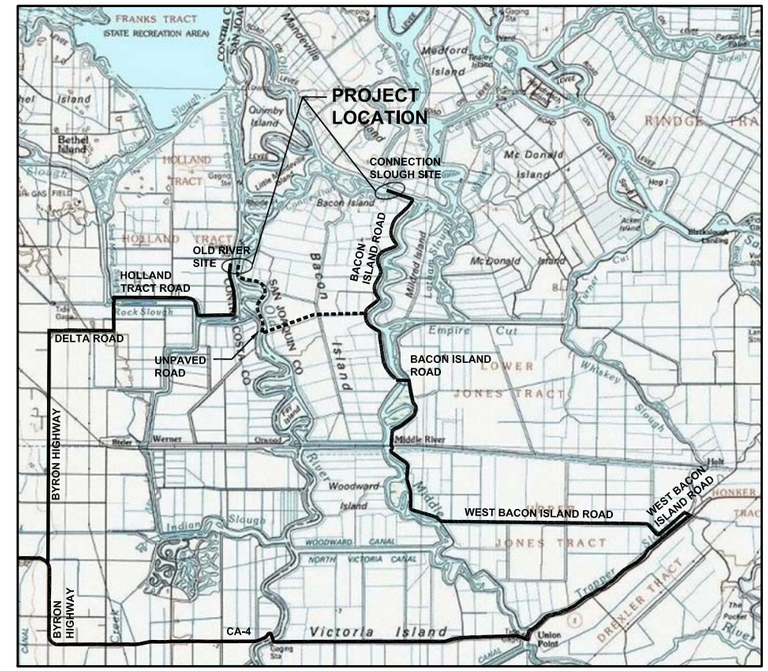

LOCATION MAP
NTS

100% SUBMITTAL
REVISION 1

IF SHEET IS LESS THAN 22" x 34"
IT IS A REDUCED PRINT –
SCALE REDUCED ACCORDINGLY.

REVISION	DESCRIPTION	BY	DATE

San Luis & Delta-Mendota Water Authority
842 6th Street, Suite 7
PO Box 2157
Los Banos, California 93635

Moffatt & Nichol
2001 N. Main Street, Suite 360
Walnut Creek, California 94596
(925) 944-5411

DSGN	DR	CHK
TDB	AB	GTH
JOB NO. 6097-03	SUBMITTED BY RMR	

2-GATES FISH PROTECTION DEMONSTRATION PROJECT

TITLE SHEET

DATE 10/02/09

SHEET 1 OF 78

G1

P:\6097-03 SWC GATE DESIGN\CADD\DWG\609703-G1.DWG 10/1/2009 11:10 AM

INDEX OF DRAWINGS

SHEET NUMBER	DRAWING NUMBER	DESCRIPTION
		GENERAL
1	G1	TITLE SHEET
2	G2	INDEX OF DRAWINGS
3	G3	GENERAL NOTES, ABBREVIATIONS AND LEGEND
4	G4	PROJECT GENERAL PLAN
		OLD RIVER
5	C1	OLD RIVER, SITE PLAN
6	C2	OLD RIVER, DREDGING PLAN AND SECTION
7	C3	OLD RIVER, BARGE BEDDING PLAN AND SECTIONS
8	C4	OLD RIVER, BARGE – ROCK FILL PLAN AND SECTIONS
9	C5	OLD RIVER, SHEET PILE WALL ARRANGEMENT PLAN AND ELEVATION, SHEET 1
10	C6	OLD RIVER SHEET PILE WALL ARRANGEMENT PLAN AND ELEVATION, SHEET 2
11	C7	OLD RIVER, BOAT RAMP PLAN AND SECTION
12	C7.1	OLD RIVER, BOAT RAMP PILE PLAN
13	C7.2	OLD RIVER, BOAT RAMP FRAMING PLAN
14	C8	OLD RIVER, BOAT RAMP DETAILS AND SECTIONS, SHEET 1
15	C9	OLD RIVER, BOAT RAMP DETAILS AND SECTIONS, SHEET 2
16	C10	OLD RIVER, BOAT RAMP DETAILS AND SECTIONS, SHEET 3
17	C11	OLD RIVER, CATWALK PLAN AND ELEVATION, SHEET 1
18	C12	OLD RIVER, CATWALK PLAN AND ELEVATION, SHEET 2
19	C13	OLD RIVER, ELECTRICAL SITE PLAN
20	C14	OLD RIVER, BARGE GENERAL ARRANGEMENT PLAN
21	C15	OLD RIVER, BARGE GENERAL ARRANGEMENT ELEVATION
22	C16	OLD RIVER, GATE SCANTLINGS
23	C17	OLD RIVER, GATE FRAMING LAYOUT
24	C18	OLD RIVER, GATE STRUCTURAL DETAILS, SHEET 1
25	C19	OLD RIVER, GATE STRUCTURAL DETAILS, SHEET 2
26	C20	OLD RIVER, GATE STRUCTURAL DETAILS, SHEET 3
27	C21	OLD RIVER, GATE STRUCTURAL DETAILS, SHEET 4
28	C22	OLD RIVER, GATE STRUCTURAL DETAILS, SHEET 5
29	C23	OLD RIVER, GATE MECHANICAL DETAILS, SHEET 1
30	C24	OLD RIVER, GATE MECHANICAL DETAILS, SHEET 2
31	C25	OLD RIVER, END WALL SCANTLINGS
32	C26	OLD RIVER, AIDS TO NAVIGATION PLAN

SHEET NUMBER	DRAWING NUMBER	DESCRIPTION
		CONNECTION SLOUGH
33	C31	CONNECTION SLOUGH, SITE PLAN
34	C32	CONNECTION SLOUGH, DREDGING – PLAN AND SECTION
35	C33	CONNECTION SLOUGH, BARGE BEDDING PLAN
36	C34	CONNECTION SLOUGH, BARGE–ROCK FILL PLAN AND SECTIONS
37	C35	CONNECTION SLOUGH, SHEET PILE WALL ARRANGEMENT PLAN AND ELEVATION
38	C36	CONNECTION SLOUGH, BOAT RAMP PLAN AND SECTION
39	C36.1	CONNECTION SLOUGH, BOAT RAMP PILE PLAN
40	C36.2	CONNECTION SLOUGH, BOAT RAMP FRAMING PLAN
41	C37	CONNECTION SLOUGH, BOAT RAMP DETAILS AND SECTIONS, SHEET 1
42	C38	CONNECTION SLOUGH, BOAT RAMP DETAILS AND SECTIONS, SHEET 2
43	C39	CONNECTION SLOUGH, BOAT RAMP DETAILS AND SECTIONS, SHEET 3
44	C40	CONNECTION SLOUGH, CATWALK – PLAN AND ELEVATION
45	C41	CONNECTION SLOUGH, ELECTRICAL SITE PLAN
46	C42	CONNECTION SLOUGH, BARGE GENERAL ARRANGEMENT PLAN
47	C43	CONNECTION SLOUGH, BARGE GENERAL ARRANGEMENT ELEVATION
48	C44	CONNECTION SLOUGH, GATE SCANTLINGS
49	C45	CONNECTION SLOUGH, GATE FRAMING LAYOUT
50	C46	CONNECTION SLOUGH, GATE STRUCTURAL DETAILS, SHEET 1
51	C47	CONNECTION SLOUGH, GATE STRUCTURAL DETAILS, SHEET 2
52	C48	CONNECTION SLOUGH, GATE STRUCTURAL DETAILS, SHEET 3
53	C49	CONNECTION SLOUGH, GATE STRUCTURAL DETAILS, SHEET 4
54	C50	CONNECTION SLOUGH, GATE STRUCTURAL DETAILS, SHEET 5
55	C51	CONNECTION SLOUGH, GATE MECHANICAL DETAILS, SHEET 1
56	C52	CONNECTION SLOUGH, GATE MECHANICAL DETAILS, SHEET 2
57	C53	CONNECTION SLOUGH, END WALL SCANTLINGS
58	C54	CONNECTION SLOUGH, AIDS TO NAVIGATION PLAN

SHEET NUMBER	DRAWING NUMBER	DESCRIPTION
		COMMON DETAILS
59	C63	SHEET PILE WALL DETAILS, SHEET 1
60	C64	SHEET PILE WALL DETAILS, SHEET 2
61	C65	BOAT RAMP PLAN AND SECTIONS
62	C66	BOAT RAMP DETAILS
63	C67	BOARDING FLOAT PLAN AND ELEVATION
64	C68	BOARDING FLOAT DETAILS
65	C69	CATWALK DETAILS, SHEET 1
66	C70	CATWALK DETAILS, SHEET 2
67	C71	CATWALK DETAILS, SHEET 3
68	C72	CATWALK DETAILS, SHEET 4
69	C73	CATWALK DETAILS, SHEET 5
70	C74	CATWALK DETAILS, SHEET 6
71	C75	AIDS TO NAVIGATION DETAILS, SHEET 1
72	C76	AIDS TO NAVIGATION DETAILS, SHEET 2
73	C77	UTILITY YARD DETAILS
74	C78	OPERATOR HOUSE EQUIPMENT AND DETAILS
75	C79	ELECTRICAL SYSTEM DIAGRAM
76	C80	HYDRAULICS SYSTEM DIAGRAM
77	C81	DREDGED MATERIAL DISPOSAL SITE
78	C82	MISCELLANEOUS DETAILS

100% SUBMITTAL REVISION 1

IF SHEET IS LESS THAN 22" x 34" IT IS A REDUCED PRINT – SCALE REDUCED ACCORDINGLY.

REVISION	DESCRIPTION	BY	DATE

San Luis & Delta–Mendota Water Authority
842 6th Street, Suite 7
PO Box 2157
Los Banos, California 93635

Moffatt & Nichol
2001 N. Main Street, Suite 360
Walnut Creek, California 94596
(925) 944–5411

DSGN	DR	CHK
TDB	AB	GTH
JOB NO. 6097–03	SUBMITTED BY RMR	

2–GATES FISH PROTECTION DEMONSTRATION PROJECT

INDEX OF DRAWINGS

DATE 10/02/09

G2

P:\6097–03 SWC GATE DESIGN\CADD\DWG\609703–G2.DWG 9/29/2009 3:59 PM

GENERAL NOTES

1. BATHYMETRY SURVEYED BY ENVIRONMENTAL DATA SOLUTIONS ON JUNE 23, 2008 AND REPRESENTS CONDITIONS ON THAT DATE.
2. KING PILE TYPE (36 INCH OD x 0.75 INCH WT) AND SPACING SHOWN ON THE PLANS WILL BE ADJUSTED ON THE BASIS OF IN-SITU SOIL BORING DATA AS SOON AS THIS INFORMATION BECOMES AVAILABLE.

VERTICAL DATUM

PROJECT ELEVATIONS ARE BASED ON NAVD'88.

HORIZONTAL DATUM

PROJECT COORDINATES ARE BASED ON THE CALIFORNIA STATE PLANE COORDINATE SYSTEM NAD 1983, ZONE 3.

DESIGN CONDITIONS

LIVE LOADS: CATWALK: 100 PSF
BOAT RAMP: 5,000 LBS
CONCENTRATED WHEEL LOAD (TOTAL 2 PER AXLE)

5 KIPS 5 KIPS
6 FT (10 KIP AXLE)

WATER ELEVATION: GATES AND SHEET PILES/ KING PILES/ ABUTMENT WALL: DIFFERENTIAL WATER ELEVATION = 3.6 FT

EARTHQUAKE: QUASI – STATIC LATERAL SEISMIC ACCELERATION, SA = 0.3g BASED ON 2006 IBC

CURRENT: CURRENT OF 2 KNOTS (3.4 FT/SEC) FREE STREAM VELOCITY

SHIP IMPACT: DOLPHINS/MONOPILES: ACCIDENTAL IMPACT 95 KIP LOAD AT EL +7.0'

OPERATING LOAD: GATE/ FRAME: HYDRAULIC ACTUATORS (PISTON FORCES)

OLD RIVER SITE $F_1 = \begin{matrix} +226.2 \text{ KIP} \\ -149.2 \text{ KIP} \end{matrix}$ $F_2 = \begin{matrix} -149.2 \text{ KIP} \\ +226.2 \text{ KIP} \end{matrix}$
(COMPRESSION +, TENSION –)

CONNECTION SLOUGH SITE $F_1 = \begin{matrix} +157.1 \text{ KIP} \\ -109.6 \text{ KIP} \end{matrix}$ $F_2 = \begin{matrix} -109.6 \text{ KIP} \\ +157.1 \text{ KIP} \end{matrix}$
(COMPRESSION +, TENSION –)

ABBREVIATIONS

&	AND
#	NUMBER
%	PERCENT
APPROX	APPROXIMATE
ASTM	ASTM INTERNATIONAL
C/C	CENTER TO CENTER
CJP	COMPLETE JOINT PENETRATION
℄	CENTER LINE
CIP	CAST-IN-PLACE
CLR	CLEAR
CONC	CONCRETE
CONT	CONTINUOUS
DIA, ø	DIAMETER
DIMS	DIMENSIONS
DWG	DRAWING
DWT	DEAD WEIGHT
(E)	EXISTING
EL	ELEVATION
EJ	EXPANSION JOINT
EW	EACH WAY
FG	FINISH GRADE
FT	FOOT OR FEET
GALV	GALVANIZED
H	HORIZONTAL
HD	HEAD
HDPE	HIGH DENSITY POLYETHYLENE
HW	HIGH WATER
IBC	INTERNATIONAL BUILDING CODE
ID	INSIDE DIAMETER
INFO	INFORMATION
LB	POUND
LW	LOW WATER
MAX	MAXIMUM
MFG	MANUFACTURING
MIN	MINIMUM
NAD	NORTH AMERICAN DATUM
NAVD	NORTH AMERICAN VERTICAL DATUM
NIC	NOT IN CONTRACT
NTS	NOT TO SCALE
OC	ON CENTER
OD	OUTSIDE DIAMETER
OG	ORIGINAL GROUND
OPP	OPPOSITE
PC/PS	PRECAST/PRESTRESSED
ℙℓ	PLATE
PJP	PARTIAL JOINT PENETRATION
PSF	POUNDS PER SQUARE FOOT
REF	REFERENCE
REINF	REINFORCEMENT
SA	SEISMIC ACCELERATION
SCH	SCHEDULE
SIM	SIMILAR
SPA	SPACES
STD	STANDARD
STIF	STIFFENER
SYMM	SYMMETRICAL
THRU	THROUGH
TYP	TYPICAL
UHMW	ULTRA HIGH MOLECULAR WEIGHT
UON	UNLESS OTHERWISE NOTED
V	VERTICAL
VC	VERTICAL CURVE
WP	WORK POINT
WT	WALL THICKNESS
W/	WITH

CROSS-REFERENCE LEGEND

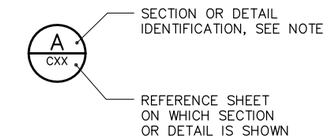

NOTE: LETTER INDICATES SECTION; NUMBER INDICATES DETAIL. WHERE THERE IS NO REFERENCE SHEET INDICATED, IT MEANS THE DETAIL OR SECTION IS TAKEN AND SHOWN ON THE SAME SHEET.

LEGEND

EXISTING FEATURE

PROPOSED FEATURE

5 EXISTING CONTOUR

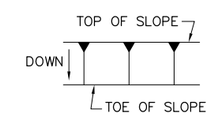

SLOPE

WORK POINT

(E) WETLAND

100% SUBMITTAL REVISION 1

IF SHEET IS LESS THAN 22" x 34" IT IS A REDUCED PRINT – SCALE REDUCED ACCORDINGLY.

REVISION	DESCRIPTION	BY	DATE

San Luis & Delta-Mendota Water Authority
842 6th Street, Suite 7
PO Box 2157
Los Banos, California 93635

Moffatt & Nichol
2001 N. Main Street, Suite 360
Walnut Creek, California 94596
(925) 944-5411

DSGN	DR	CHK
TDB	AB	GTH
JOB NO. 6097-03	SUBMITTED BY RMR	

2-GATES FISH PROTECTION DEMONSTRATION PROJECT

ABBREVIATIONS, LEGEND AND GENERAL NOTES

DATE 10/02/09

SHEET 3 OF 78

G3

P:\6097-03 SWC GATE DESIGN\CADD\DWG\609703-G3.DWG 10/1/2009 10:14 AM

PROJECT GENERAL PLAN

SCALE: 1"= 1000'

1000' 0' 1000' 2000'

SCALE: 1"=1000'

100% SUBMITTAL REVISION 1

IF SHEET IS LESS THAN 22" x 34" IT IS A REDUCED PRINT – SCALE REDUCED ACCORDINGLY.

REVISION	DESCRIPTION	BY	DATE

San Luis & Delta-Mendota Water Authority
842 6th Street, Suite 7
PO Box 2157
Los Banos, California 93635

Moffatt & Nichol
2001 N. Main Street, Suite 360
Walnut Creek, California 94596
(925) 944-5411

DSGN	DR	CHK
TDB	EP	GTH
JOB NO. 6097-03	SUBMITTED BY RMR	

2-GATES FISH PROTECTION DEMONSTRATION PROJECT

PROJECT GENERAL PLAN

DATE 10/02/09

SHEET 4 OF 78

G4

P:\6097-03 SWC GATE DESIGN\CADD\DWG\609703-G4.DWG 9/28/2009 11:00 AM

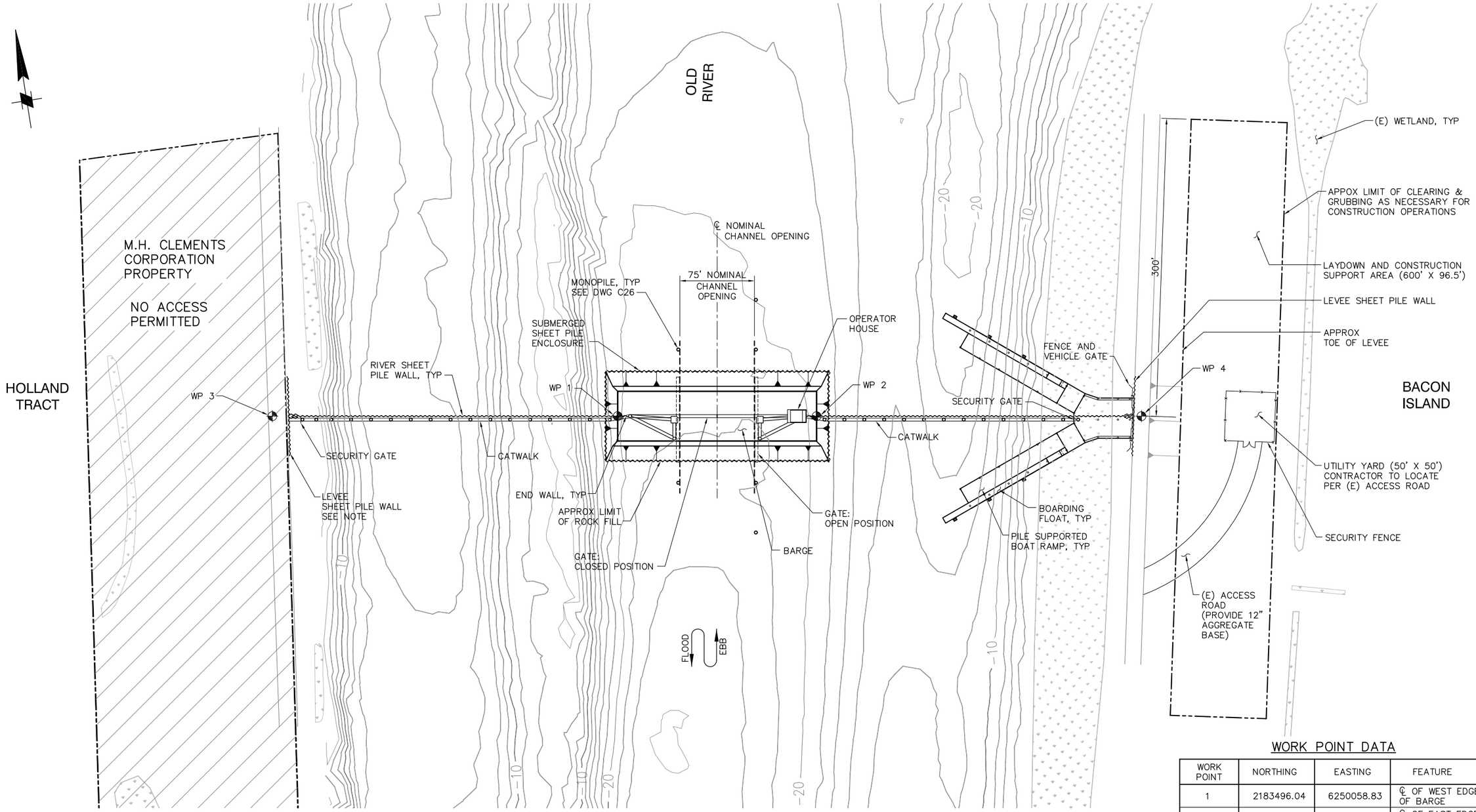

NOTE:

LEVEE SHEET PILE WALL ON HOLLAND TRACK SHALL BE DRIVEN FROM THE WATER ONLY. NO LANDSIDE ACCESS SHALL BE PROVIDED.

SITE PLAN

SCALE: 1"= 50'

50' 0' 50' 100'

SCALE: 1"=50'

WORK POINT DATA

WORK POINT	NORTHING	EASTING	FEATURE
1	2183496.04	6250058.83	℄ OF WEST EDGE OF BARGE
2	2183465.50	6250256.48	℄ OF EAST EDGE OF BARGE
3	2183549.08	6249715.65	WEST LEVEE AND ℄ OF GATE
4	2183415.60	6250579.41	EAST LEVEE AND ℄ OF GATE

100% SUBMITTAL REVISION 1

IF SHEET IS LESS THAN 22" x 34" IT IS A REDUCED PRINT – SCALE REDUCED ACCORDINGLY.

REVISION	DESCRIPTION	BY	DATE

San Luis & Delta-Mendota Water Authority
842 6th Street, Suite 7
PO Box 2157
Los Banos, California 93635

Moffatt & Nichol
2001 N. Main Street, Suite 360
Walnut Creek, California 94596
(925) 944-5411

DSGN	DR	CHK
TDB	EP/AB	GTH
JOB NO. 6097-03	SUBMITTED BY RMR	

2-GATES FISH PROTECTION DEMONSTRATION PROJECT

OLD RIVER SITE PLAN

DATE 10/02/09

SHEET 5 OF 78

C1

P:\6097-03 SWC GATE DESIGN\CADD\DWG\609703-C1.DWG 10/1/2009 9:15 AM

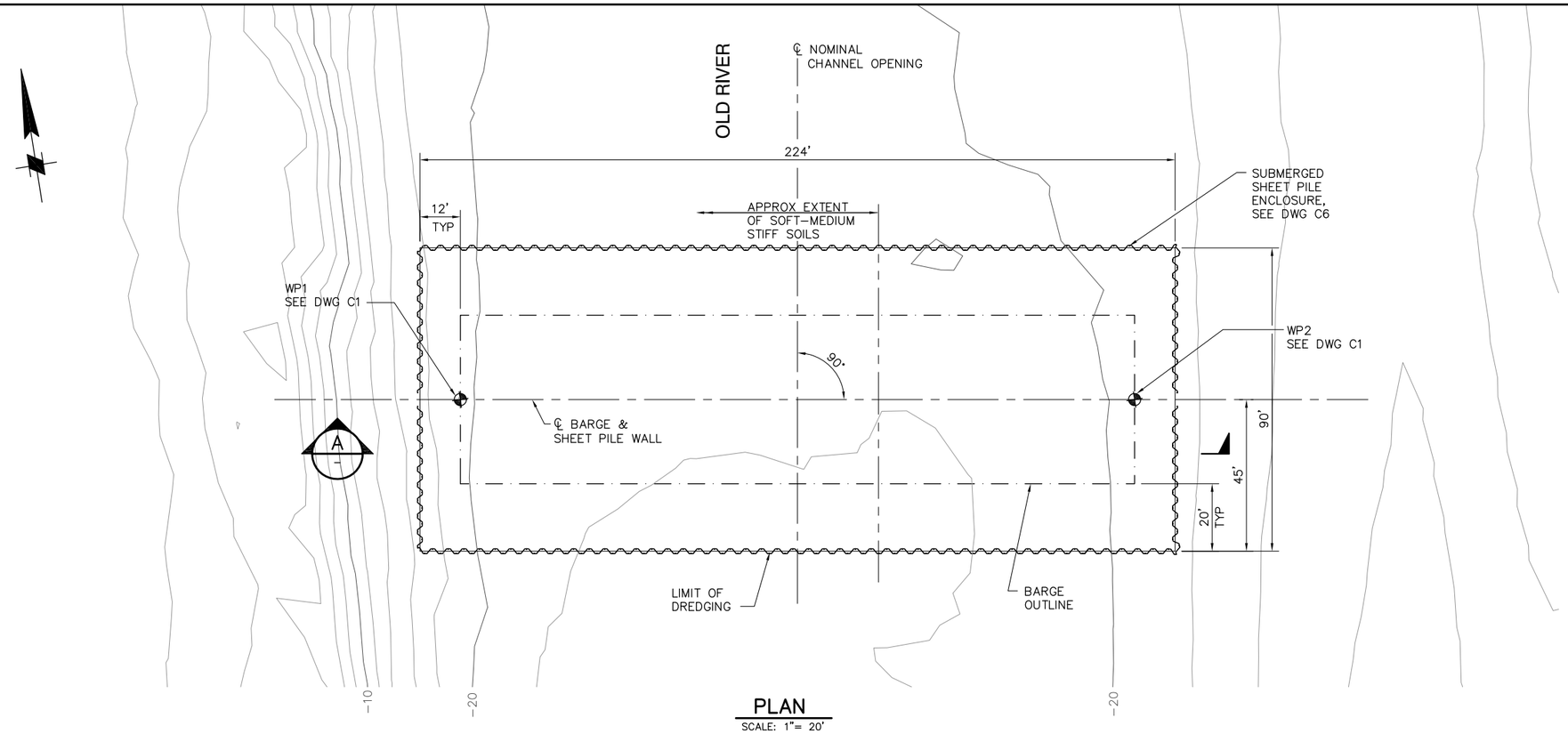

PLAN
SCALE: 1"= 20'

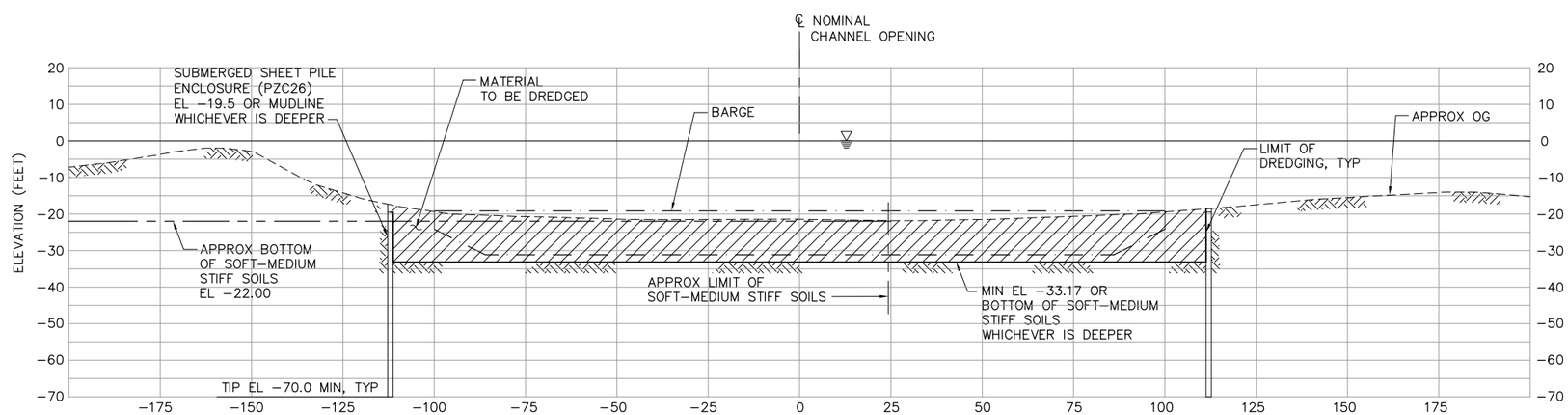

A SECTION
SCALE: 1"=20'

NOTE:
GATE AND ALL OTHER FEATURES NOT SHOWN FOR CLARITY.

20' 0' 20' 40'
SCALE: 1"=20'

100% SUBMITTAL REVISION 1

IF SHEET IS LESS THAN 22" x 34" IT IS A REDUCED PRINT – SCALE REDUCED ACCORDINGLY.

REVISION	DESCRIPTION	BY	DATE

San Luis & Delta–Mendota Water Authority
842 6th Street, Suite 7
PO Box 2157
Los Banos, California 93635

Moffatt & Nichol
2001 N. Main Street, Suite 360
Walnut Creek, California 94596
(925) 944–5411

DSGN	DR	CHK
TDB	AB	GTH
JOB NO. 6097–03	SUBMITTED BY RMR	

2–GATES FISH PROTECTION DEMONSTRATION PROJECT

DATE 10/02/09

SHEET 6 OF 78

OLD RIVER
DREDGING PLAN AND SECTION

C2

P:\6097–03 SWC GATE DESIGN\CADD\DWG\609703–C2.DWG 10/1/2009 2:37 PM

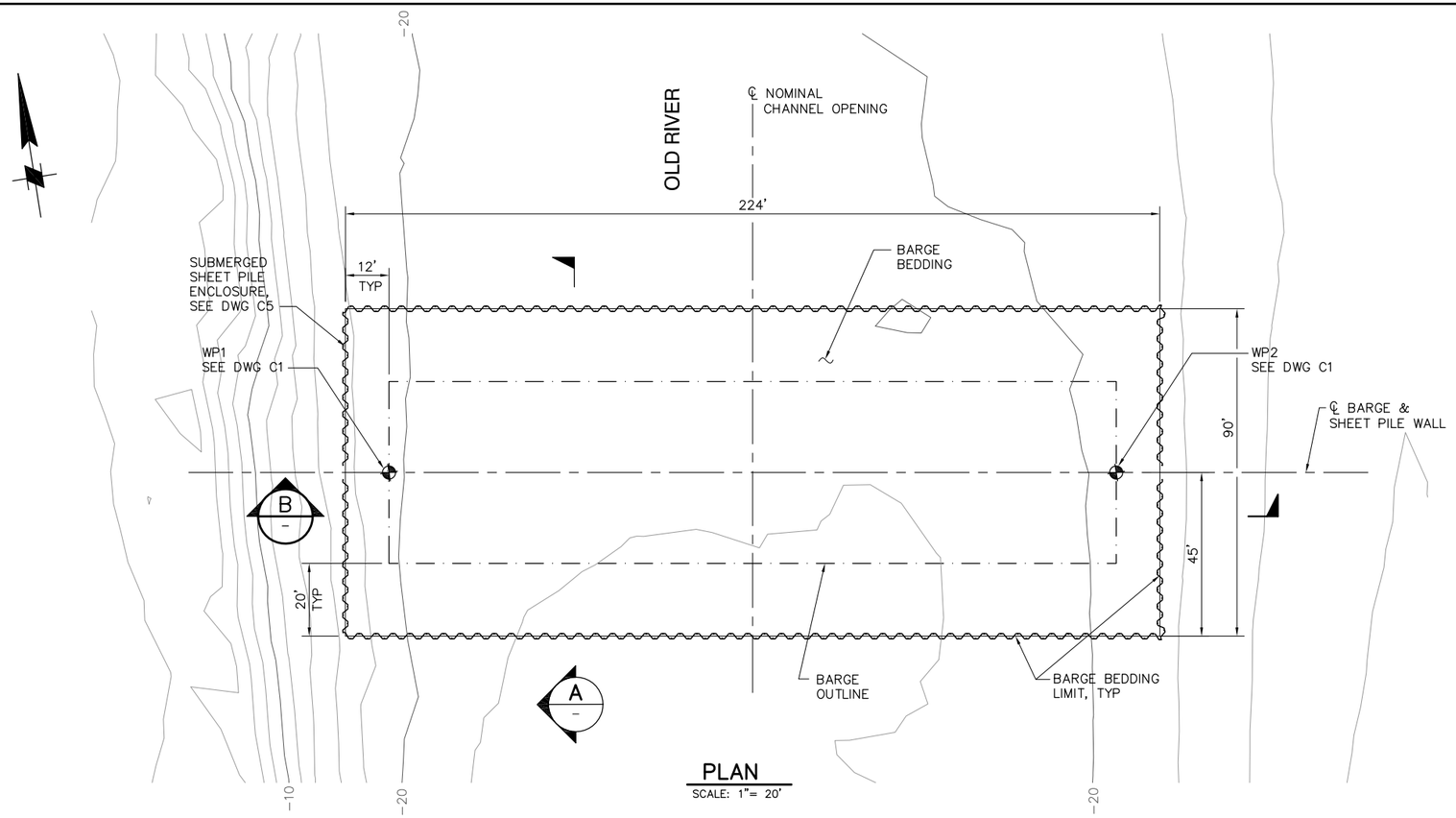

PLAN
SCALE: 1"= 20'

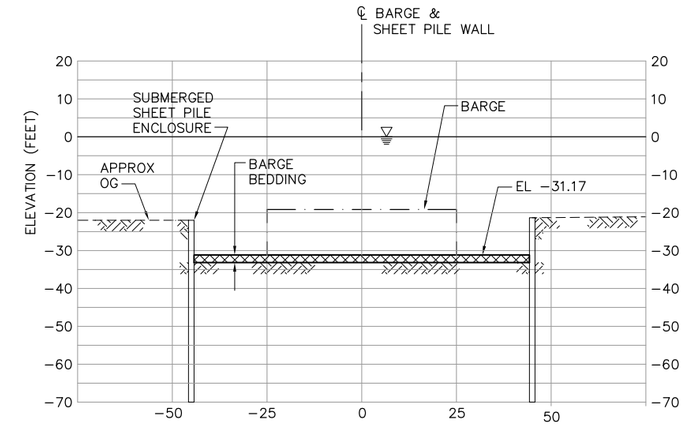

A SECTION
SCALE: 1"=20'

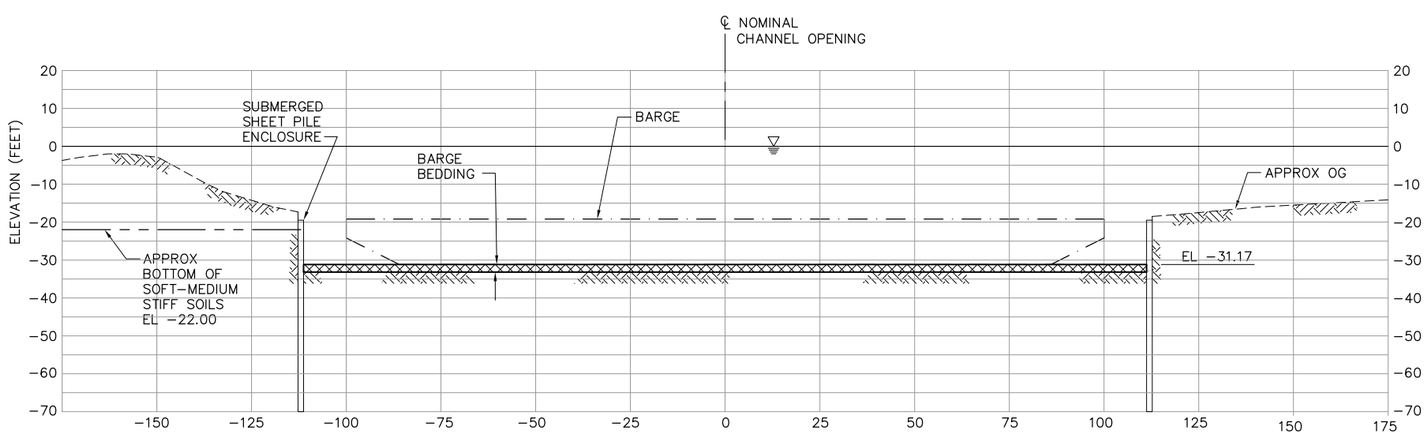

B SECTION
SCALE: 1"=20'

NOTE:
GATE AND ALL OTHER FEATURES NOT SHOWN FOR CLARITY.

20' 0' 20' 40'
SCALE: 1"=20'

100% SUBMITTAL REVISION 1

IF SHEET IS LESS THAN 22" x 34" IT IS A REDUCED PRINT – SCALE REDUCED ACCORDINGLY.

REVISION	DESCRIPTION	BY	DATE

San Luis & Delta-Mendota Water Authority
842 6th Street, Suite 7
PO Box 2157
Los Banos, California 93635

Moffatt & Nichol
2001 N. Main Street, Suite 360
Walnut Creek, California 94596
(925) 944-5411

DSGN	DR	CHK
TDB	AB	GTH
JOB NO. 6097-03	SUBMITTED BY RMR	

2-GATES FISH PROTECTION DEMONSTRATION PROJECT

DATE 10/02/09

SHEET 7 OF 78

OLD RIVER
BARGE BEDDING PLAN AND SECTIONS

C3

P:\6097-03 SWC GATE DESIGN\CADD\DWG\609703-C3.DWG 10/1/2009 10:15 AM

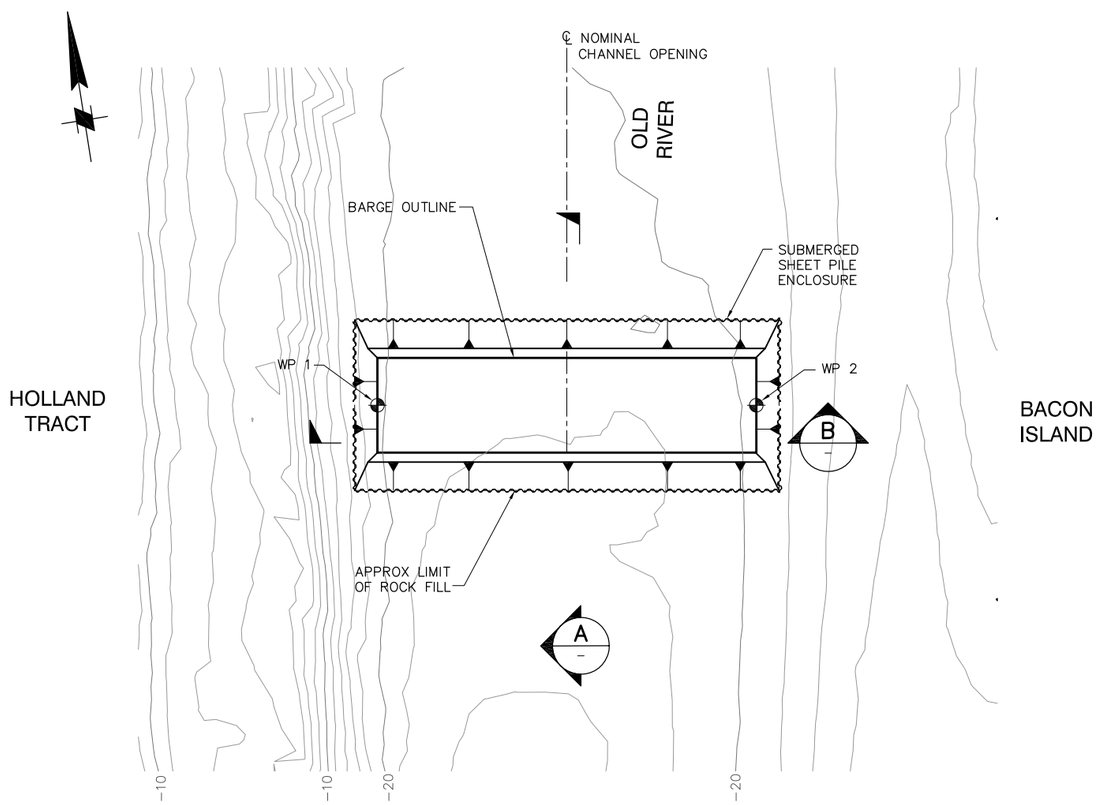

PLAN
SCALE: 1" = 40'

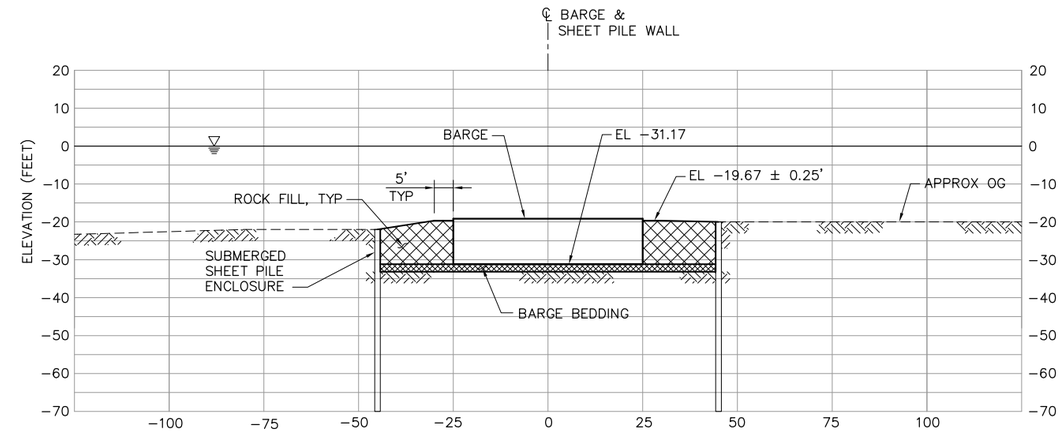

A SECTION
SCALE: 1"=20'

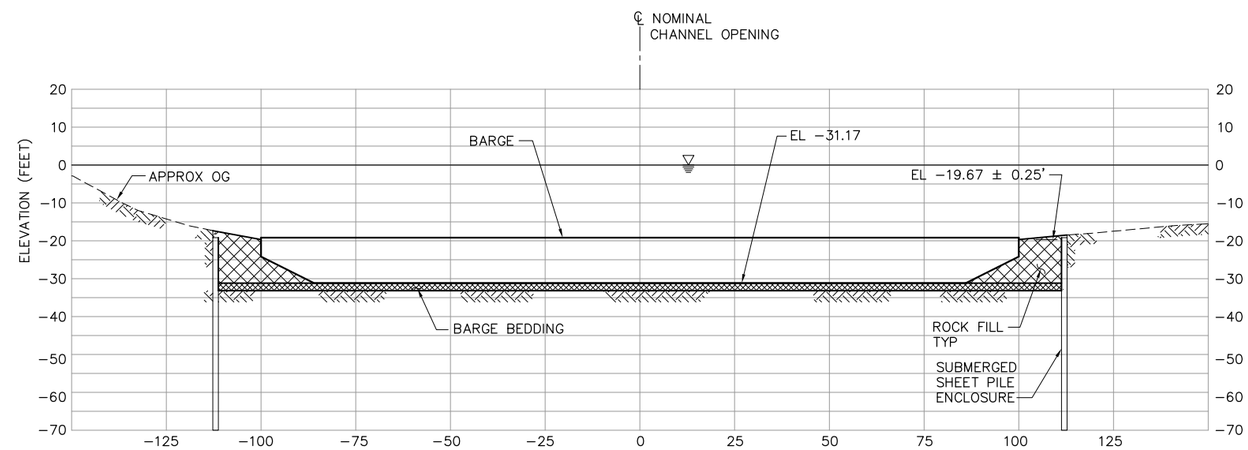

B SECTION
SCALE: 1"=20'

NOTES:

1. KING PILES AND SHEET PILES NEAR BARGE SHALL BE PLACED BEFORE ROCK LOCKING FILL.
2. GATE AND ALL OTHER FEATURES NOT SHOWN FOR CLARITY

40' 0' 40' 80'
SCALE: 1"=40'

100% SUBMITTAL REVISION 1

IF SHEET IS LESS THAN 22" x 34" IT IS A REDUCED PRINT – SCALE REDUCED ACCORDINGLY.

REVISION	DESCRIPTION	BY	DATE

San Luis & Delta-Mendota Water Authority
842 6th Street, Suite 7
PO Box 2157
Los Banos, California 93635

Moffatt & Nichol
2001 N. Main Street, Suite 360
Walnut Creek, California 94596
(925) 944-5411

DSGN	DR	CHK
JMB	EP/AB	TDB
JOB NO. 6097-03	SUBMITTED BY RMR	

2-GATES FISH PROTECTION DEMONSTRATION PROJECT

OLD RIVER
BARGE - ROCK FILL
PLAN AND SECTIONS

DATE 10/02/09

SHEET 8 OF 78

C4

P:\6097-03 SWC GATE DESIGN\CADD\DWG\609703-C4.DWG 10/1/2009 10:19 AM

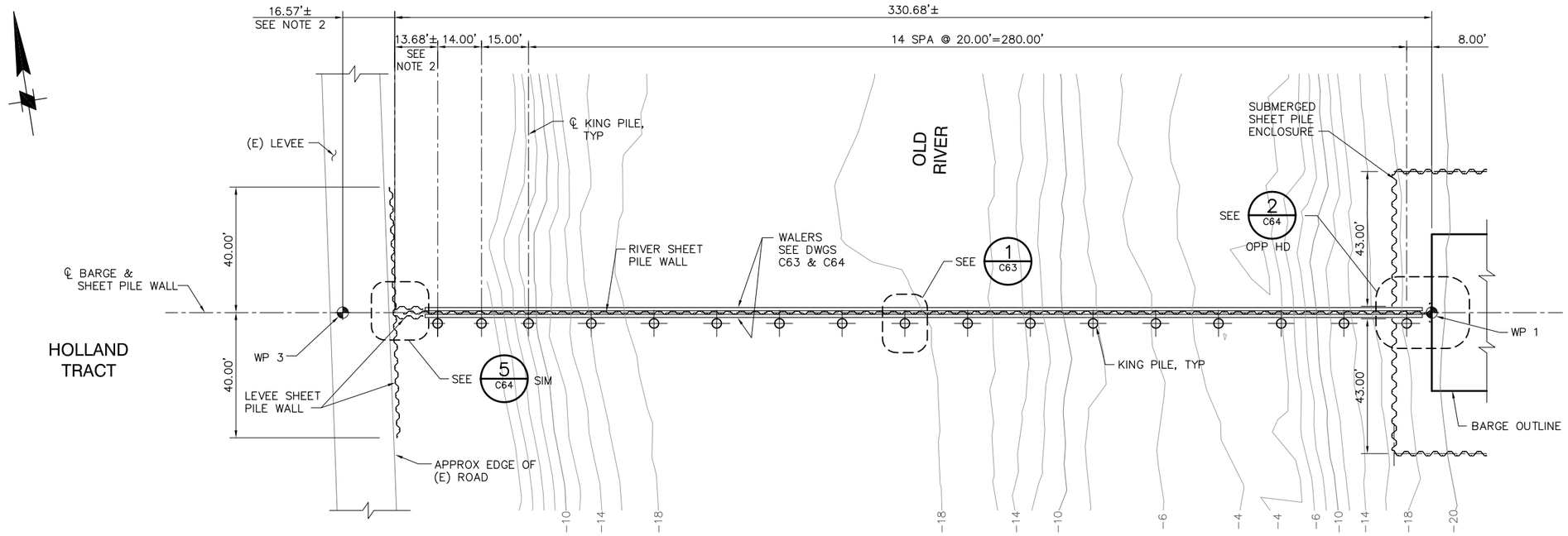

PLAN

SCALE: 1"= 20'

NOTE:
CATWALK NOT SHOWN FOR CLARITY.

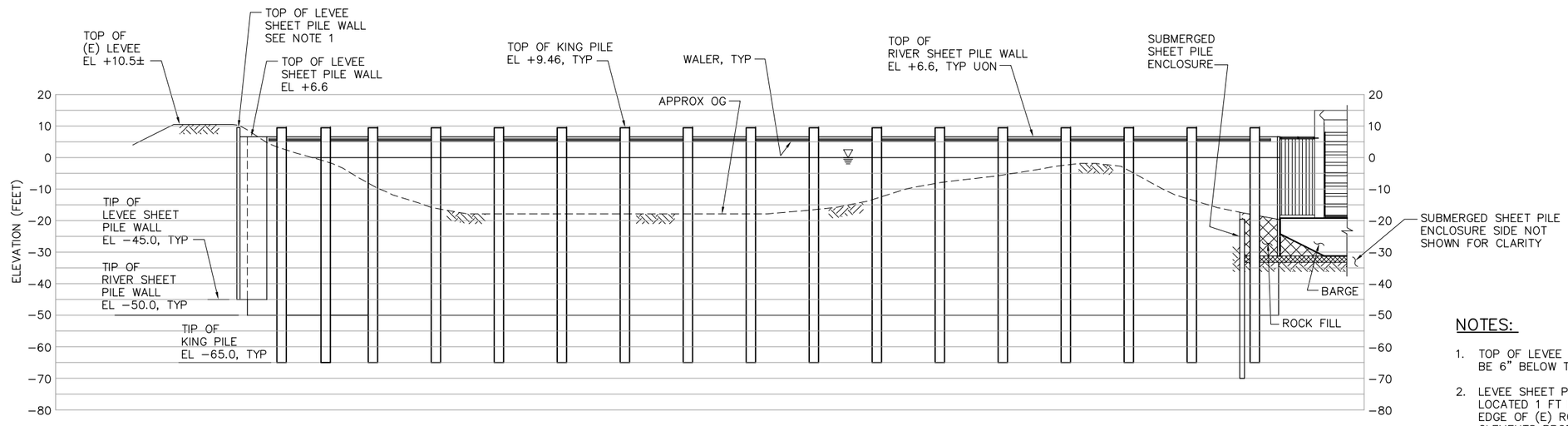

ELEVATION

SCALE: 1"= 20'

NOTE:
CATWALK NOT SHOWN FOR CLARITY.

NOTES:

1. TOP OF LEVEE SHEET PILE WALL SHALL BE 6" BELOW TOP OF (E) LEVEE UON.
2. LEVEE SHEET PILE WALL TO BE LOCATED 1 FT MIN CLEAR OFF THE EDGE OF (E) ROAD SURFACE AND THE CLEMENTS PROPERTY LINE.

20' 0' 20' 40'

SCALE: 1"=20'

100% SUBMITTAL REVISION 1

IF SHEET IS LESS THAN 22" x 34" IT IS A REDUCED PRINT – SCALE REDUCED ACCORDINGLY.

REVISION	DESCRIPTION	BY	DATE

San Luis & Delta-Mendota Water Authority
842 6th Street, Suite 7
PO Box 2157
Los Banos, California 93635

Moffatt & Nichol
2001 N. Main Street, Suite 360
Walnut Creek, California 94596
(925) 944-5411

DSGN	DR	CHK
JMB	EP/AB	TDB
JOB NO. 6097-03	SUBMITTED BY RMR	

2-GATES FISH PROTECTION DEMONSTRATION PROJECT

DATE 10/02/09

SHEET 9 OF 78

OLD RIVER
SHEET PILE WALL ARRANGEMENT
PLAN AND ELEVATION, SHEET 1

C5

P:\6097-03 SWC GATE DESIGN\CADD\DWG\609703-C5.DWG 10/1/2009 2:32 PM

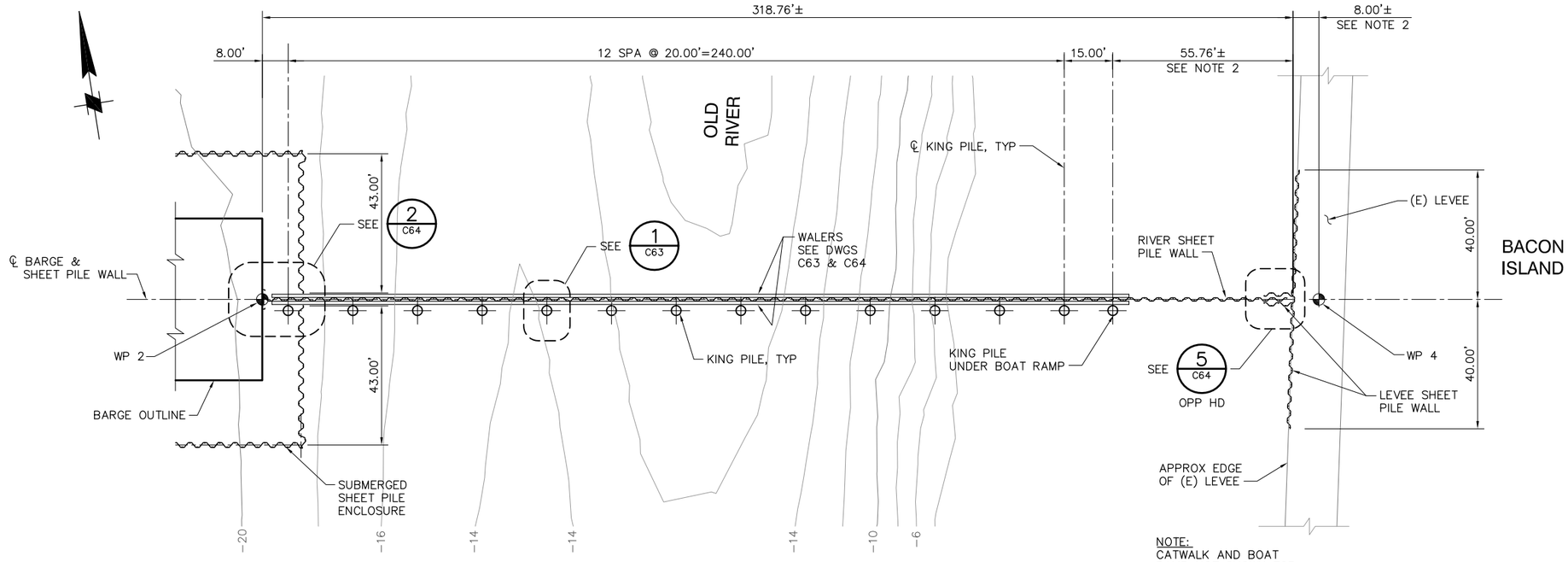

NOTE:
CATWALK AND BOAT RAMP NOT SHOWN FOR CLARITY.

PLAN
SCALE: 1"= 20'

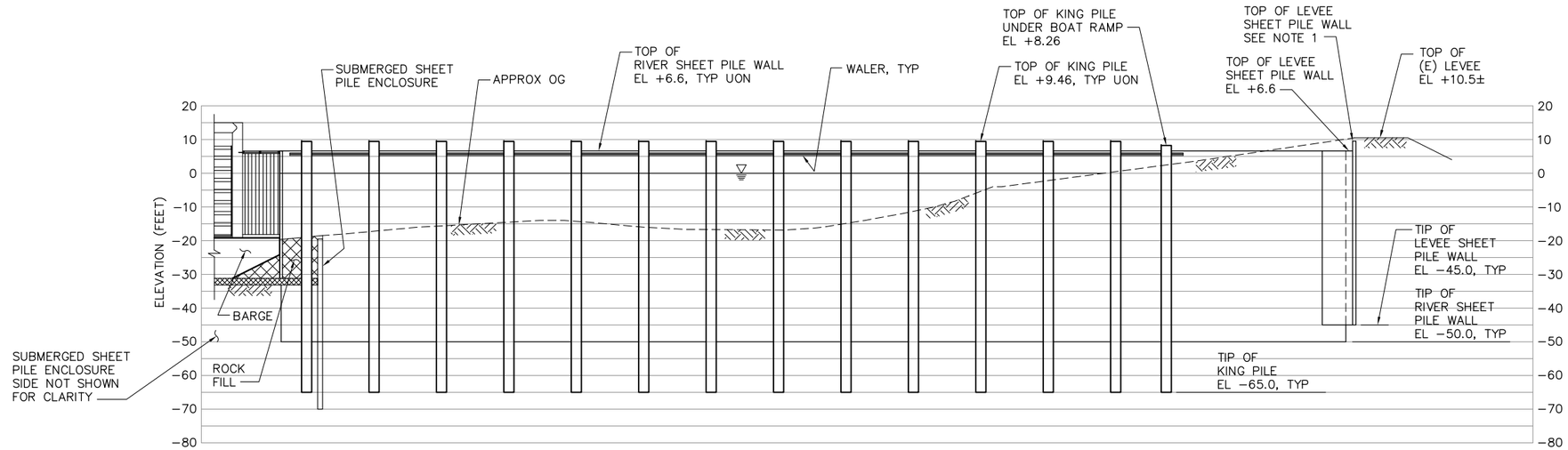

ELEVATION
SCALE: 1"= 20'

NOTE:
CATWALK AND BOAT RAMP NOT SHOWN FOR CLARITY.

20' 0' 20' 40'
SCALE: 1"=20'

NOTES:

1. TOP OF LEVEE SHEET PILE WALL SHALL BE 6" BELOW TOP OF (E) LEVEE UON.
2. LEVEE SHEET PILE WALL TO BE LOCATED 1 FT MIN OFF THE EDGE OF (E) ROAD SURFACE.

100% SUBMITTAL REVISION 1

IF SHEET IS LESS THAN 22" x 34" IT IS A REDUCED PRINT – SCALE REDUCED ACCORDINGLY.

REVISION	DESCRIPTION	BY	DATE

San Luis & Delta-Mendota Water Authority
842 6th Street, Suite 7
PO Box 2157
Los Banos, California 93635

Moffatt & Nichol
2001 N. Main Street, Suite 360
Walnut Creek, California 94596
(925) 944-5411

DSGN	DR	CHK
JMB	EP/AB	TDB
JOB NO. 6097-03	SUBMITTED BY RMR	

2-GATES FISH PROTECTION DEMONSTRATION PROJECT

DATE 10/02/09

SHEET 10 OF 78

OLD RIVER
SHEET PILE WALL ARRANGEMENT
PLAN AND ELEVATION, SHEET 2

C6

P:\6097-03 SWC GATE DESIGN\CADD\DWG\609703-C6.DWG 9/30/2009 4:43 PM

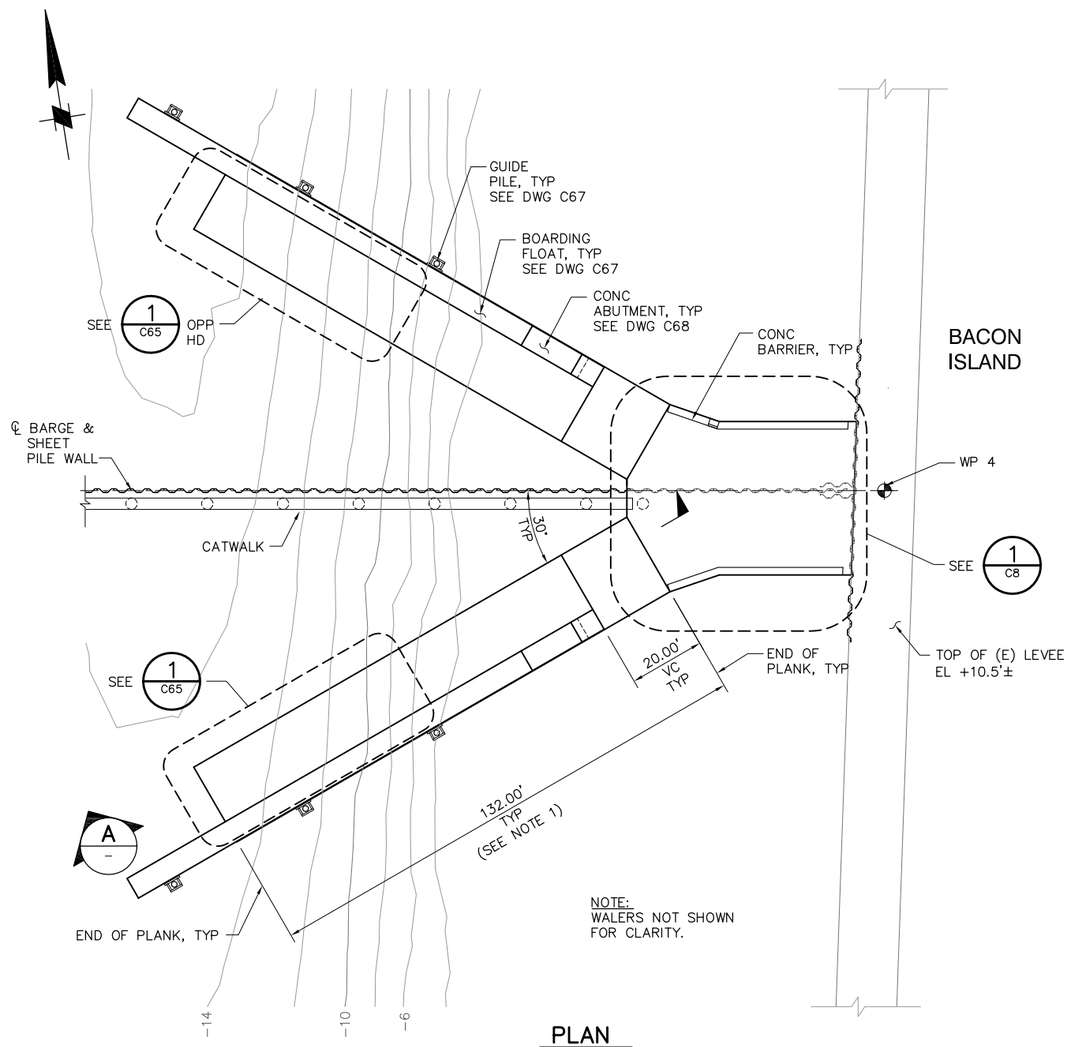

NOTE:
WALERS NOT SHOWN FOR CLARITY.

PLAN
SCALE: 1" = 20'

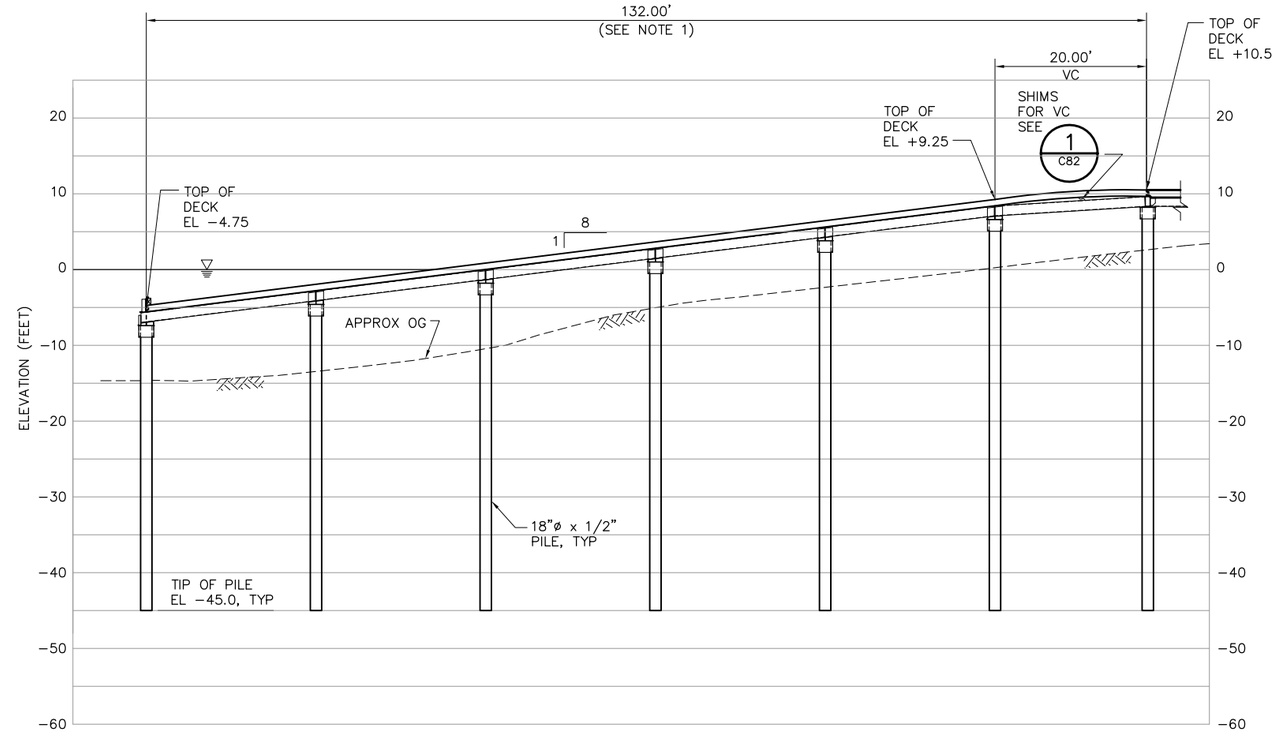

A SECTION
SCALE: 1"=10'

NOTES:

1. TRUE LENGTH OF RAMP ACCOUNTS FOR AN AVERAGE GAP OF 3/8" PER PLANK JOINT.

10' 0' 10' 20'
SCALE: 1"=10'

20' 0' 20' 40'
SCALE: 1"=20'

100% SUBMITTAL REVISION 1

IF SHEET IS LESS THAN 22" x 34" IT IS A REDUCED PRINT – SCALE REDUCED ACCORDINGLY.

REVISION	DESCRIPTION	BY	DATE

San Luis & Delta-Mendota Water Authority
842 6th Street, Suite 7
PO Box 2157
Los Banos, California 93635

Moffatt & Nichol
2001 N. Main Street, Suite 360
Walnut Creek, California 94596
(925) 944-5411

DSGN	DR	CHK
JMB	EP/AB	TDB
JOB NO. 6097-03	SUBMITTED BY RMR	

2-GATES FISH PROTECTION DEMONSTRATION PROJECT

OLD RIVER
BOAT RAMP PLAN AND SECTION

DATE 10/02/09

SHEET 11 OF 78

C7

P:\6097-03 SWC GATE DESIGN\CADD\DWG\609703-C7.DWG 9/30/2009 4:43 PM

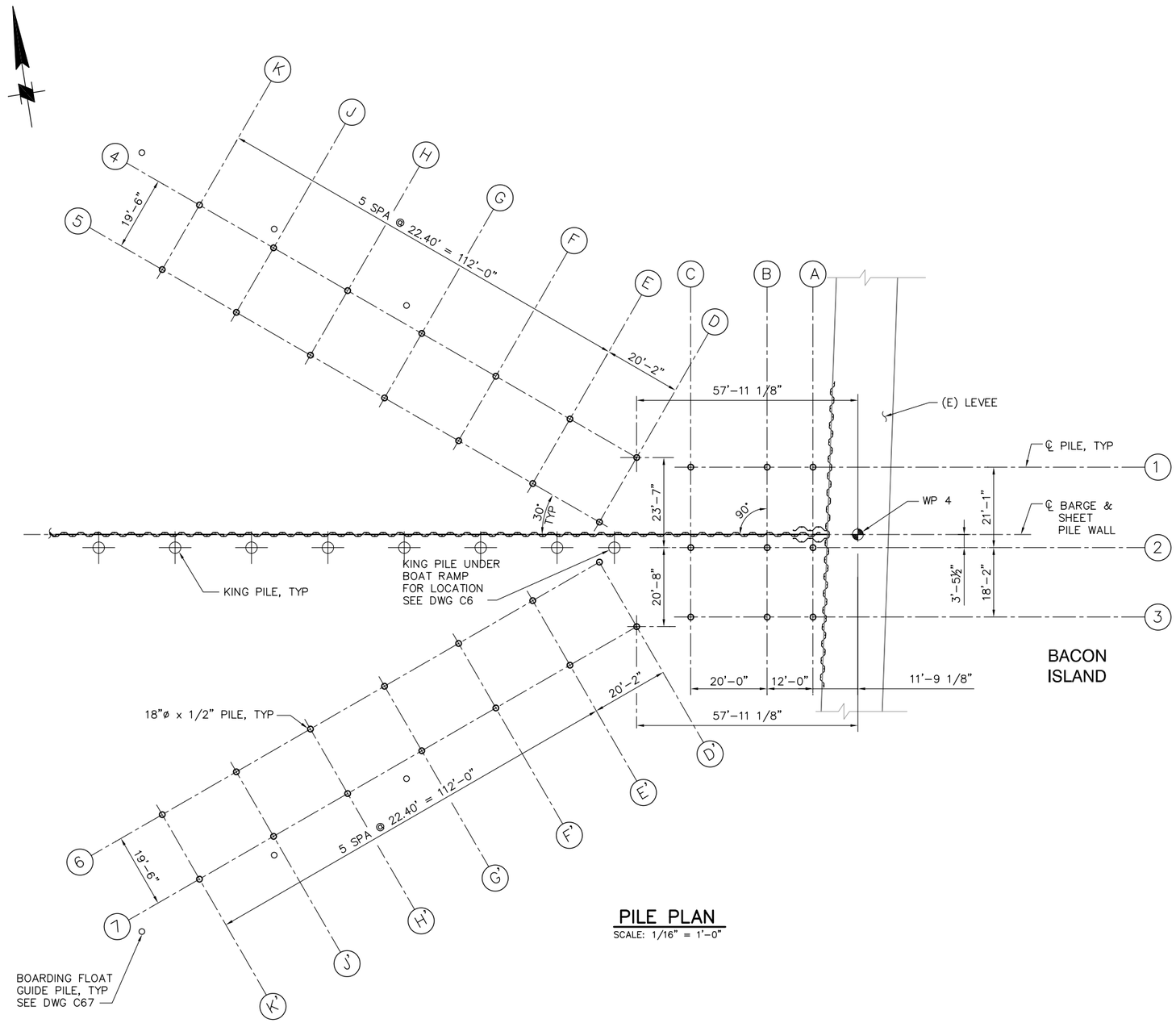

PILE PLAN

SCALE: 1/16" = 1'-0"

16'-0" 0'-0" 16'-0" 32'-0"

SCALE: 1/16"=1'-0"

100% SUBMITTAL REVISION 1

IF SHEET IS LESS THAN 22" x 34" IT IS A REDUCED PRINT – SCALE REDUCED ACCORDINGLY.

REVISION	DESCRIPTION	BY	DATE

San Luis & Delta-Mendota Water Authority
842 6th Street, Suite 7
PO Box 2157
Los Banos, California 93635

Moffatt & Nichol
2001 N. Main Street, Suite 360
Walnut Creek, California 94596
(925) 944-5411

DSGN	DR	CHK
JMB	EP/AB	TDB
JOB NO. 6097-03	SUBMITTED BY RMR	

2-GATES FISH PROTECTION DEMONSTRATION PROJECT

OLD RIVER BOAT RAMP PILE PLAN

DATE 10/02/09

SHEET 12 OF 78

C7.1

P:\6097-03 SWC GATE DESIGN\CADD\DWG\609703-C7.1.DWG 9/30/2009 4:47 PM

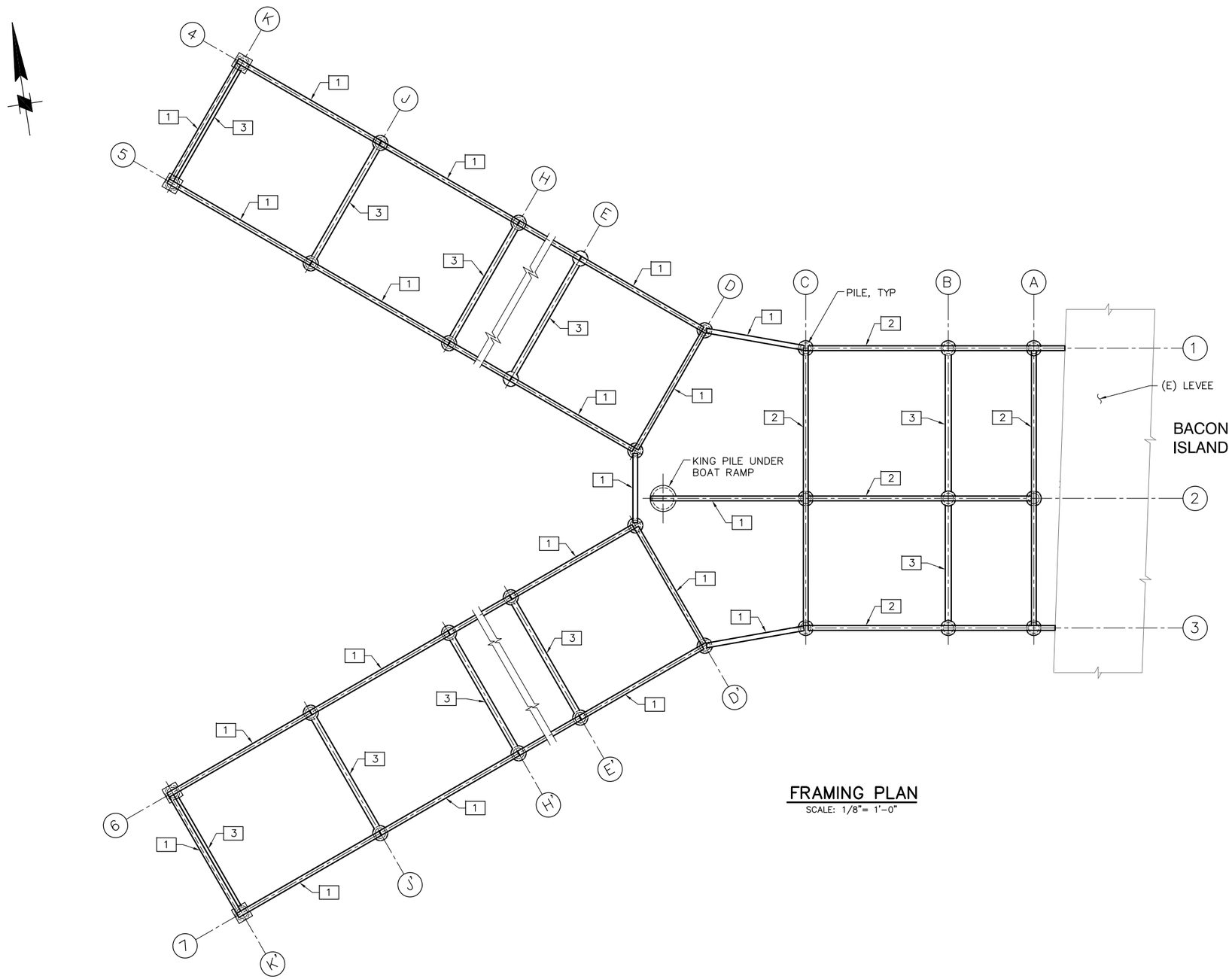

FRAMING PLAN

SCALE: 1/8"= 1'-0"

LEGEND:

1	HSS 16x8x1/2
2	HSS 16x8x1/2 CONTINUOUS THRU SUPPORT
3	10"ø XSTRONG PIPE TRANSVERSE "CAP" BEAM

NOTE:

LEVEE SHEET PILE WALL, RIVER SHEET PILE WALL AND KING PILES NOT SHOWN FOR CLARITY.

8'-0" 0'-0" 8'-0" 16'-0"

SCALE: 1/8"=1'-0"

100% SUBMITTAL REVISION 1

IF SHEET IS LESS THAN 22" x 34" IT IS A REDUCED PRINT – SCALE REDUCED ACCORDINGLY.

REVISION	DESCRIPTION	BY	DATE

San Luis & Delta-Mendota Water Authority
842 6th Street, Suite 7
PO Box 2157
Los Banos, California 93635

Moffatt & Nichol
2001 N. Main Street, Suite 360
Walnut Creek, California 94596
(925) 944-5411

DSGN	DR	CHK
JMB	EP/AB	TDB
JOB NO. 6097-03	SUBMITTED BY RMR	

2-GATES FISH PROTECTION DEMONSTRATION PROJECT

OLD RIVER
BOAT RAMP FRAMING PLAN

DATE 10/02/09

SHEET 13 OF 78

C7.2

P:\6097-03 SWC GATE DESIGN\CADD\DWG\609703-C7.2.DWG 9/30/2009 4:47 PM

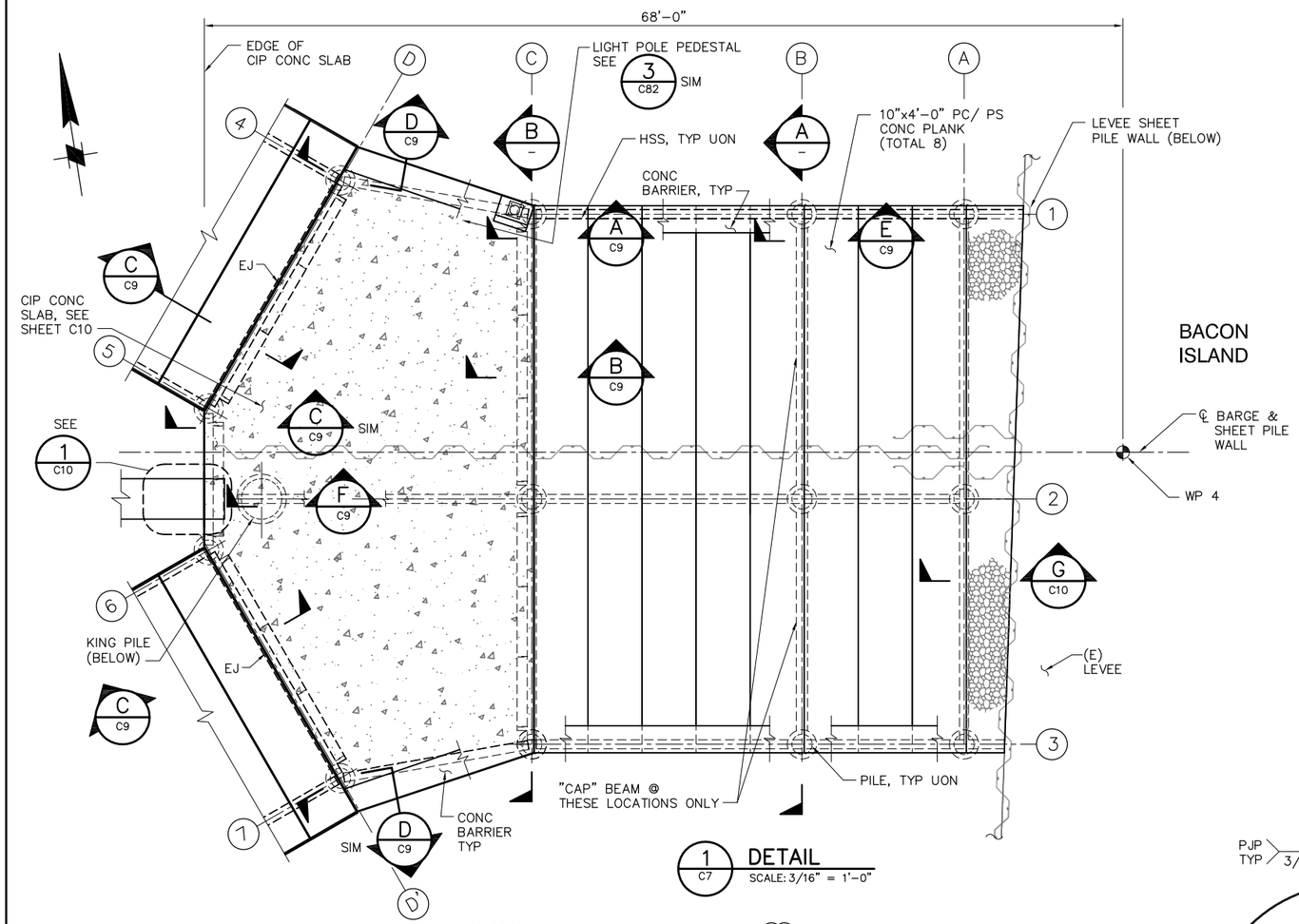

1/C7 DETAIL
SCALE: 3/16" = 1'-0"

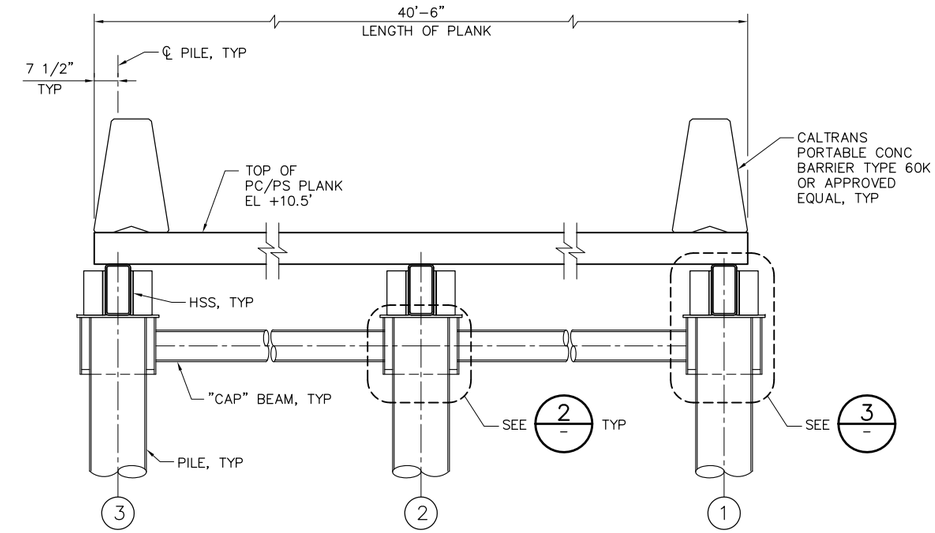

A/- SECTION
SCALE: 1/2"=1'-0"

WELDING NOTE:

ALL STIFFENER PLATES SHALL HAVE DOUBLE SIDED 1/4" FILLET WELDS UON.

NOTES:

1. ALL PC/PS PLANKS SHALL BEAR ON/AGAINST NEOPRENE "UNDERLAYMENT" BEARING STRIP WITH A MINIMUM 1/8" THICKNESS.

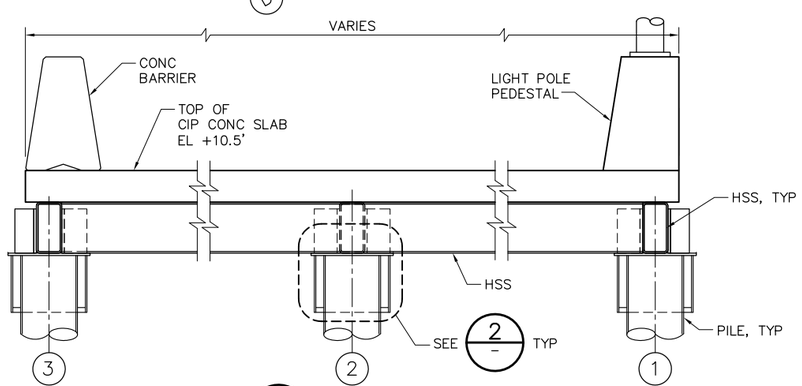

B/- SECTION
SCALE: 1/2"=1'-0"

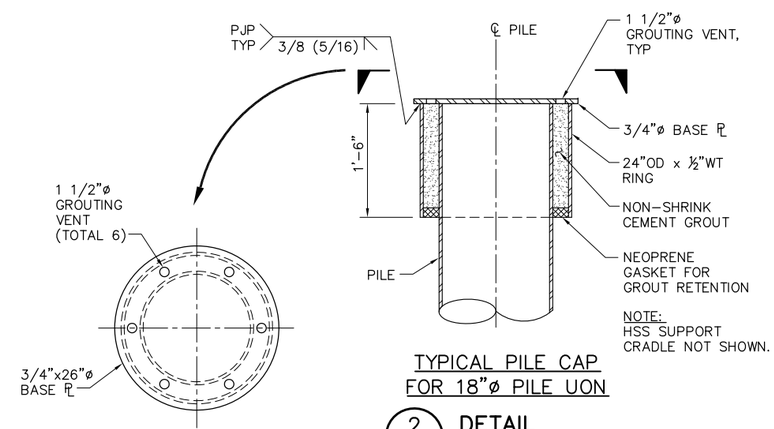

TYPICAL PILE CAP FOR 18"ø PILE UON

2/- DETAIL
SCALE: 1" = 1'-0"

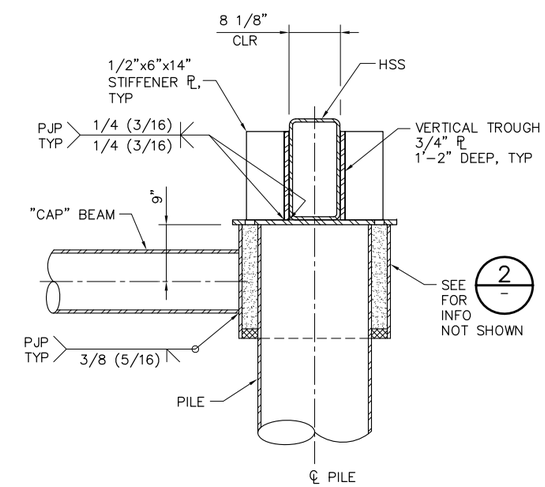

3/- DETAIL
SCALE: 1" = 1'-0"

1'-0" 0'-0" 1'-0" 2'-0"
SCALE: 1"=1'-0"

100% SUBMITTAL REVISION 1

IF SHEET IS LESS THAN 22" x 34" IT IS A REDUCED PRINT – SCALE REDUCED ACCORDINGLY.

REVISION	DESCRIPTION	BY	DATE

San Luis & Delta-Mendota Water Authority
842 6th Street, Suite 7
PO Box 2157
Los Banos, California 93635

Moffatt & Nichol
2001 N. Main Street, Suite 360
Walnut Creek, California 94596
(925) 944-5411

DSGN	DR	CHK
JMB	EP	TDB
JOB NO. 6097-03	SUBMITTED BY RMR	

2-GATES FISH PROTECTION DEMONSTRATION PROJECT

OLD RIVER
BOAT RAMP DETAILS AND SECTIONS
SHEET 1

DATE 10/02/09
SHEET 14 OF 78
C8

P:\6097-03 SWC GATE DESIGN\CADD\DWG\609703-C8.DWG 9/30/2009 4:48 PM

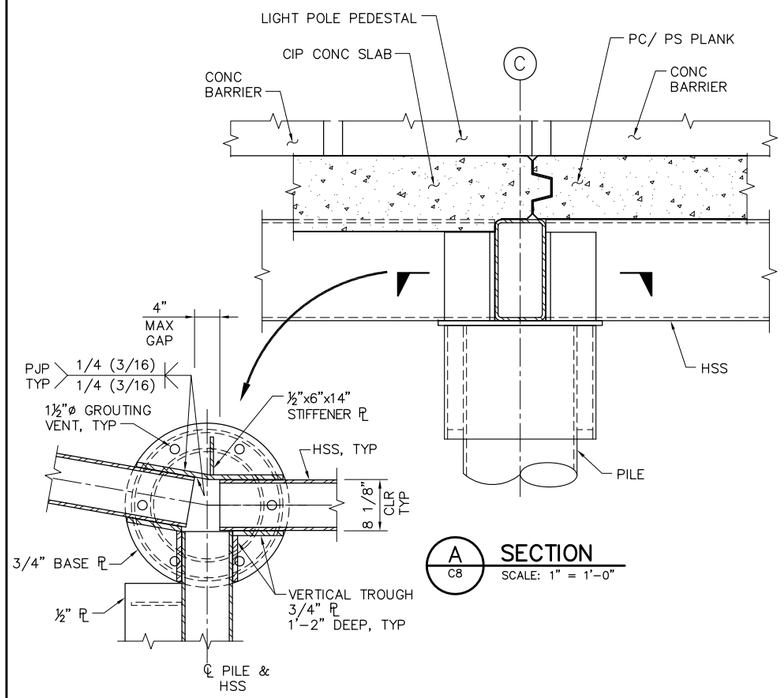

A C8 SECTION
SCALE: 1" = 1'-0"

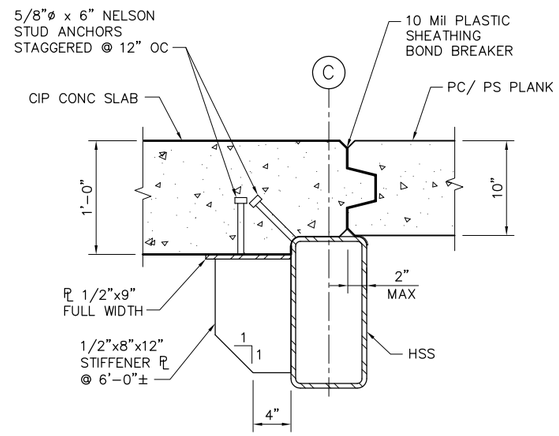

B C8 SECTION
SCALE: 1 1/2" = 1'-0"

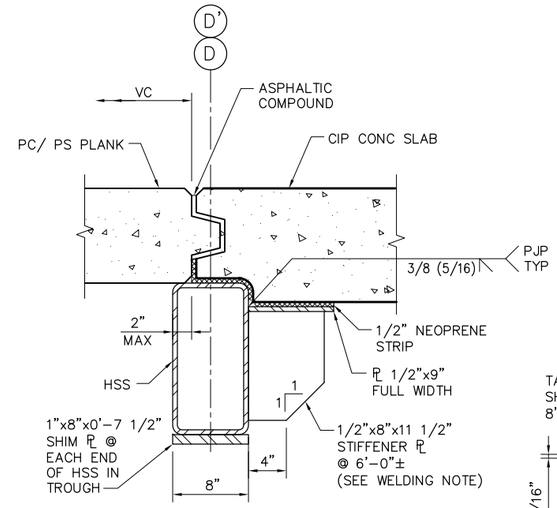

SECTION @ EXPANSION JOINT

C C8 SECTION
SCALE: 1 1/2" = 1'-0"

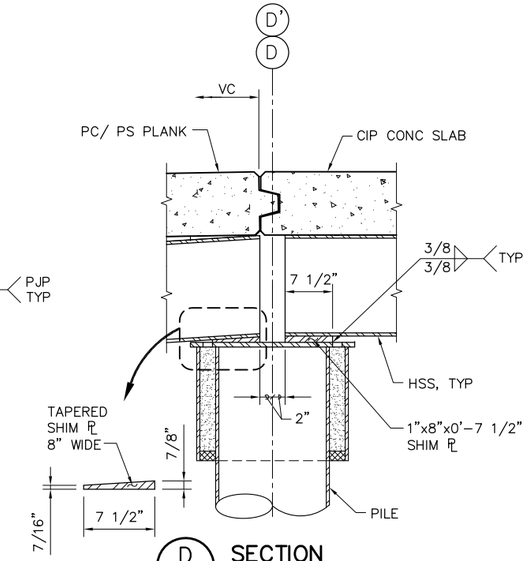

D C8 SECTION
SCALE: 1" = 1'-0"

WELDING NOTE:

ALL STIFFENER PLATES SHALL HAVE DOUBLE SIDED 1/4" FILLET WELDS UON.

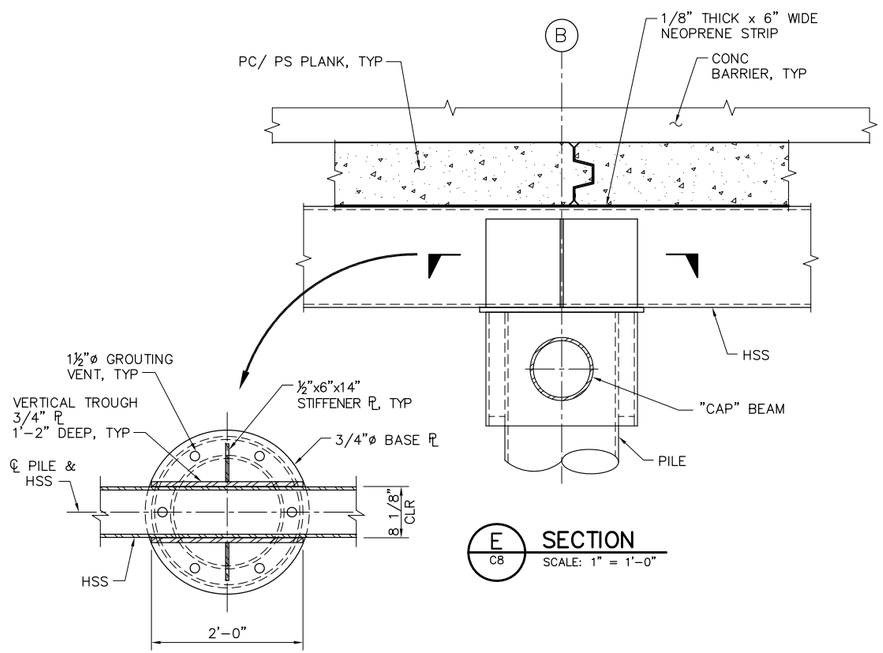

E C8 SECTION
SCALE: 1" = 1'-0"

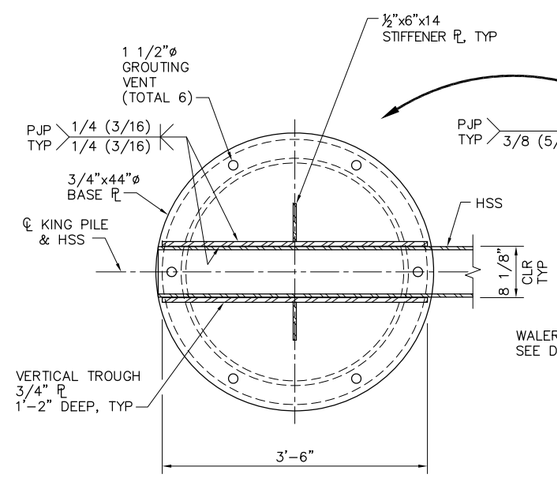

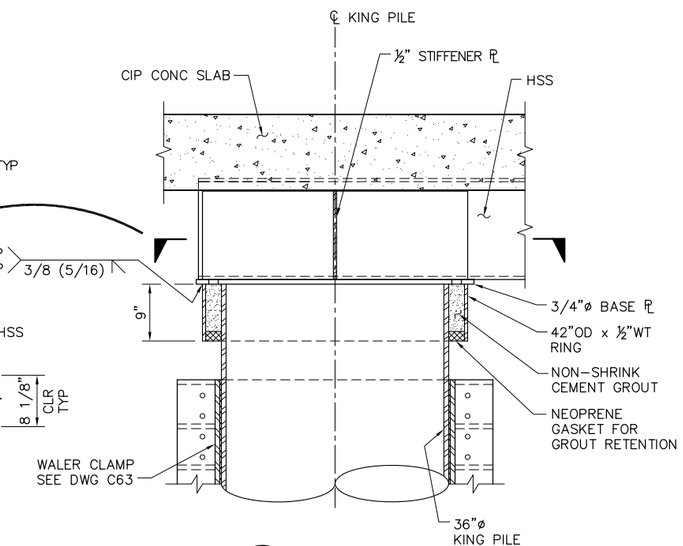

F C8 SECTION
SCALE: 1" = 1'-0"

1'-0" 0'-0" 1'-0" 2'-0"
SCALE: 1"=1'-0"

100% SUBMITTAL REVISION 1

IF SHEET IS LESS THAN 22" x 34" IT IS A REDUCED PRINT – SCALE REDUCED ACCORDINGLY.

REVISION	DESCRIPTION	BY	DATE

San Luis & Delta-Mendota Water Authority
842 6th Street, Suite 7
PO Box 2157
Los Banos, California 93635

Moffatt & Nichol
2001 N. Main Street, Suite 360
Walnut Creek, California 94596
(925) 944-5411

DSGN	DR	CHK
JMB	EP	TDB
JOB NO. 6097-03	SUBMITTED BY RMR	

2-GATES FISH PROTECTION DEMONSTRATION PROJECT

OLD RIVER
BOAT RAMP DETAILS AND SECTIONS
SHEET 2

DATE 10/02/09
SHEET 15 OF 78
C9

P:\6097-03 SWC GATE DESIGN\CADD\DWG\609703-C9.DWG 9/1/2009 9:32 AM

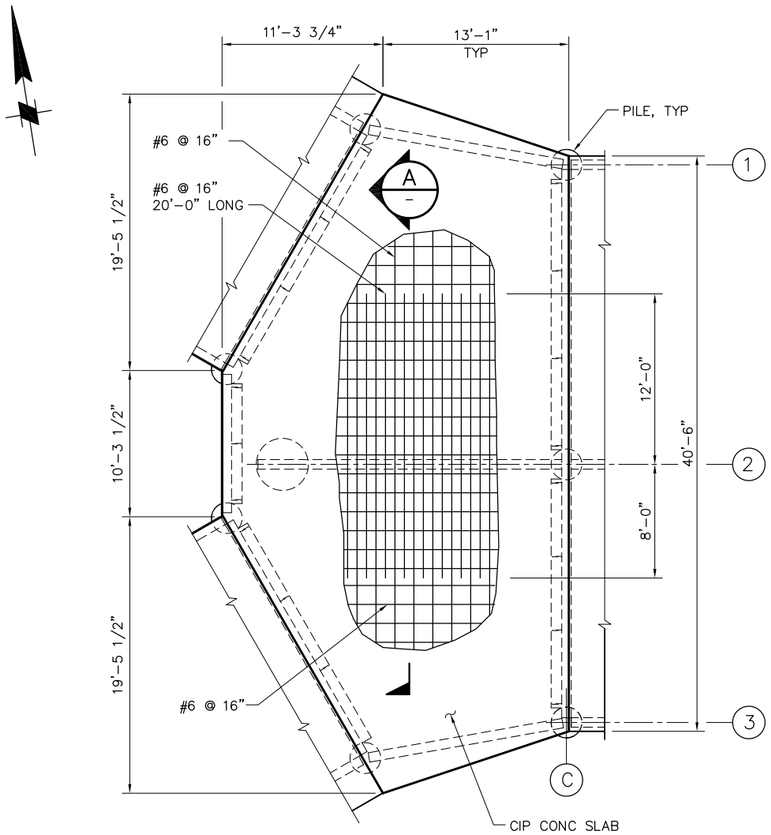

TOP SLAB REINFORCEMENT

SCALE: 3/16"= 1'-0"

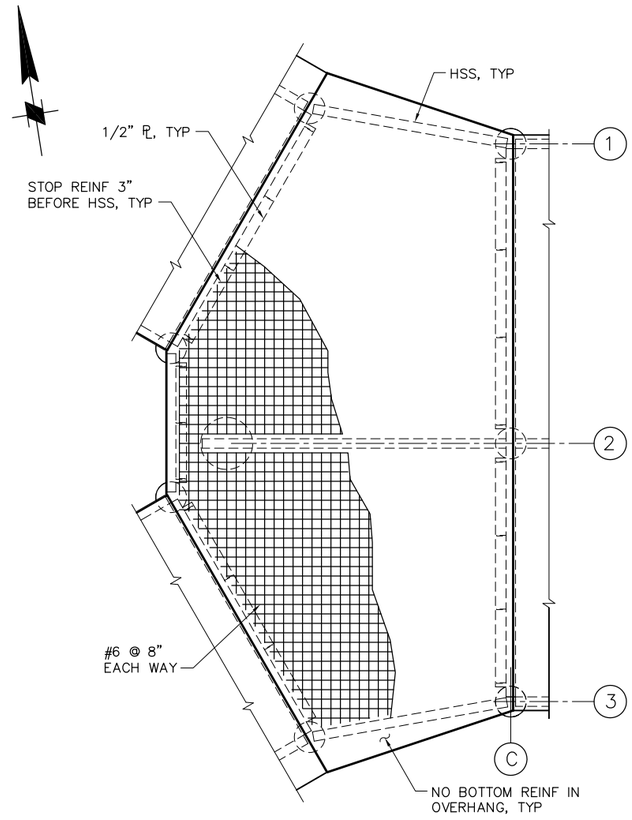

BOTTOM SLAB REINFORCEMENT

SCALE: 3/16"= 1'-0"

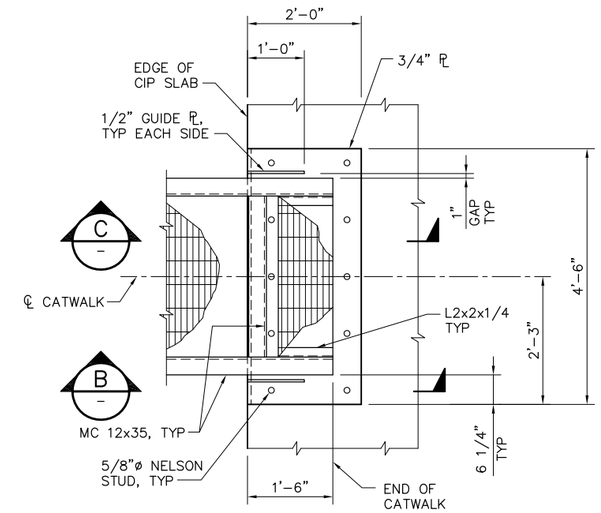

PLAN AT END OF CATWALK

1 / C8 DETAIL

SCALE: 3/4" = 1'-0"

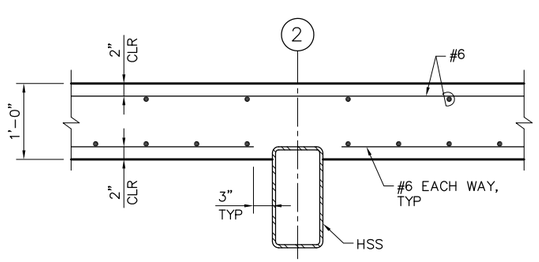

A / – SECTION

SCALE: 1" = 1'-0"

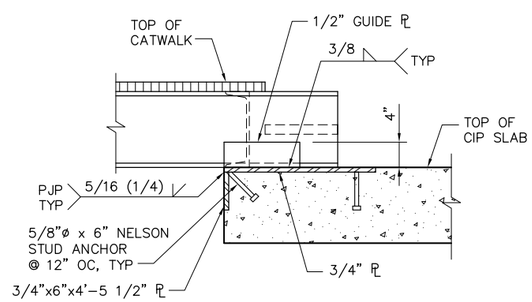

B / – SECTION

SCALE: 1" = 1'-0"

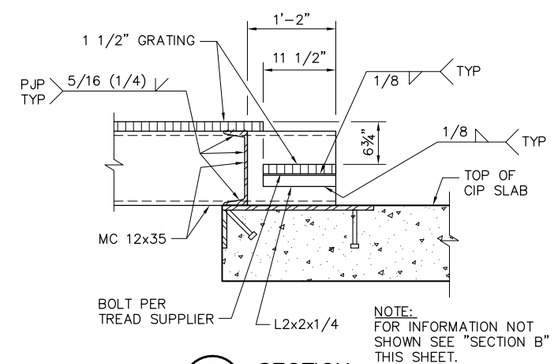

NOTE:
FOR INFORMATION NOT SHOWN SEE "SECTION B" THIS SHEET.

C / – SECTION

SCALE: 1" = 1'-0"

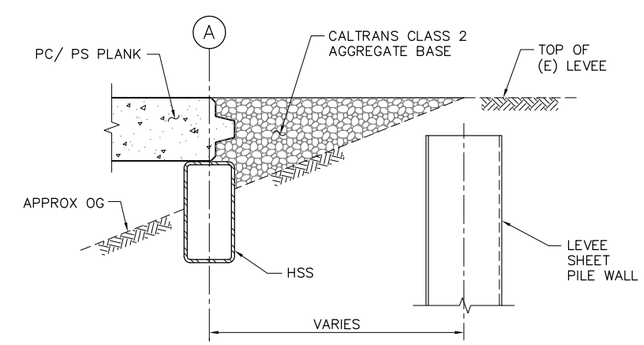

G / C8 SECTION

SCALE: 1" = 1'-0"

1'-0" 0'-0" 1'-0" 2'-0"

SCALE: 1"=1'-0"

100% SUBMITTAL REVISION 1

IF SHEET IS LESS THAN 22" x 34" IT IS A REDUCED PRINT – SCALE REDUCED ACCORDINGLY.

REVISION	DESCRIPTION	BY	DATE

San Luis & Delta-Mendota Water Authority
842 6th Street, Suite 7
PO Box 2157
Los Banos, California 93635

Moffatt & Nichol
2001 N. Main Street, Suite 360
Walnut Creek, California 94596
(925) 944-5411

DSGN	DR	CHK
JMB	EP	TDB
JOB NO. 6097-03	SUBMITTED BY RMR	

2-GATES FISH PROTECTION DEMONSTRATION PROJECT

OLD RIVER
BOAT RAMP DETAILS AND SECTIONS
SHEET 3

DATE 10/02/09

SHEET 16 OF 78

C10

P:\6097-03 SWC GATE DESIGN\CADD\DWG\609703-C10.DWG 9/1/2009 9:33 AM

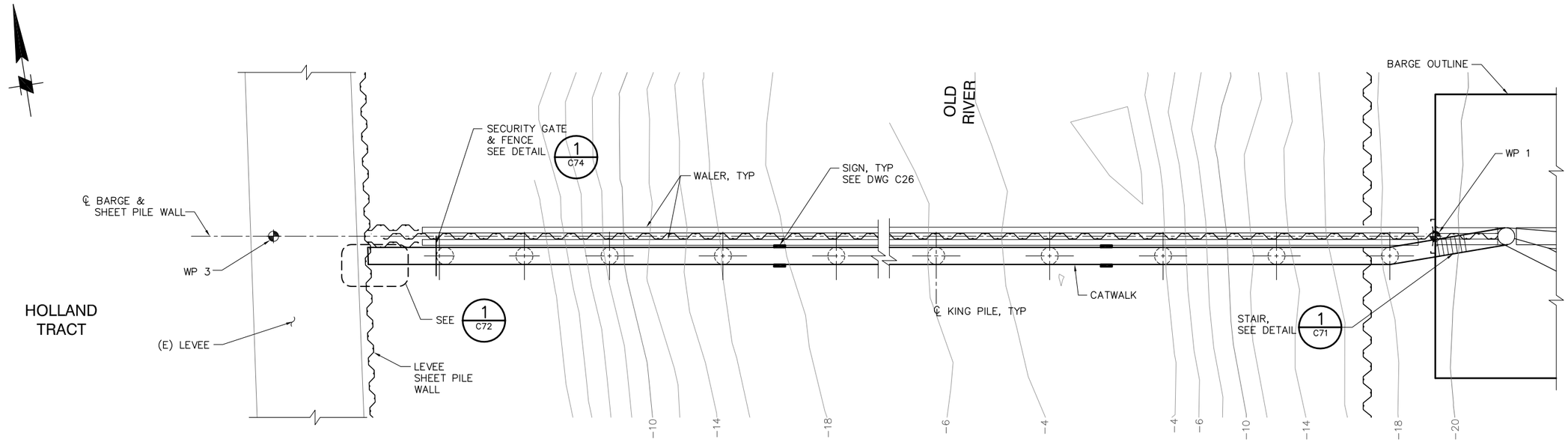

PLAN

SCALE: 1"= 10'

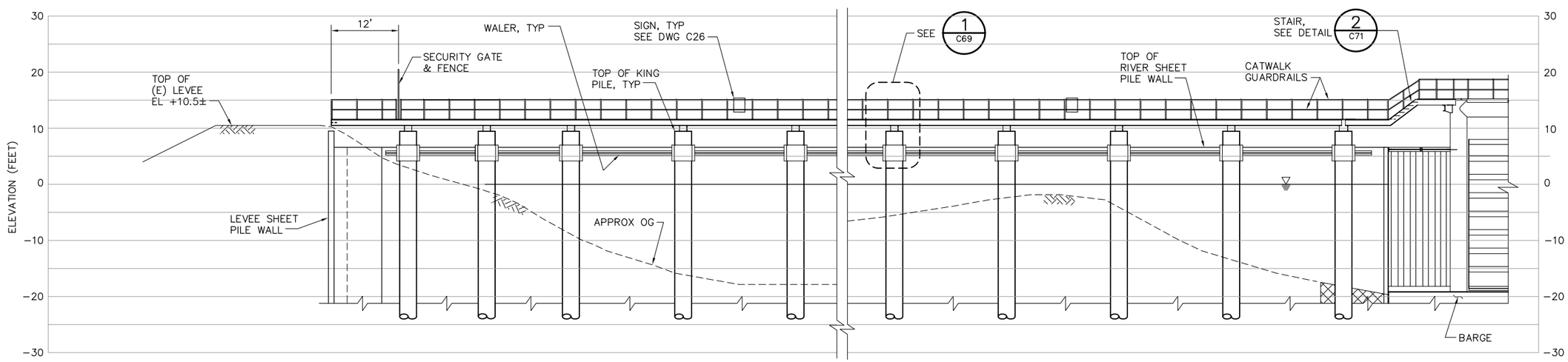

ELEVATION

SCALE: 1"= 10'

NOTE: SUBMERGED SHEET PILE ENCLOSURE NOT SHOWN FOR CLARITY.

10' 0' 10' 20'

SCALE: 1"=10'

100% SUBMITTAL REVISION 1

IF SHEET IS LESS THAN 22" x 34" IT IS A REDUCED PRINT – SCALE REDUCED ACCORDINGLY.

REVISION	DESCRIPTION	BY	DATE

San Luis & Delta-Mendota Water Authority
842 6th Street, Suite 7
PO Box 2157
Los Banos, California 93635

Moffatt & Nichol
2001 N. Main Street, Suite 360
Walnut Creek, California 94596
(925) 944-5411

DSGN	DR	CHK
JMB	EP/AB	TDB
JOB NO. 6097-03	SUBMITTED BY RMR	

2-GATES FISH PROTECTION DEMONSTRATION PROJECT

OLD RIVER CATWALK PLAN AND ELEVATION, SHEET 1

DATE 10/02/09

SHEET 17 OF 78

C11

P:\6097-03 SWC GATE DESIGN\CADD\DWG\609703-C11.DWG 10/1/2009 9:47 AM

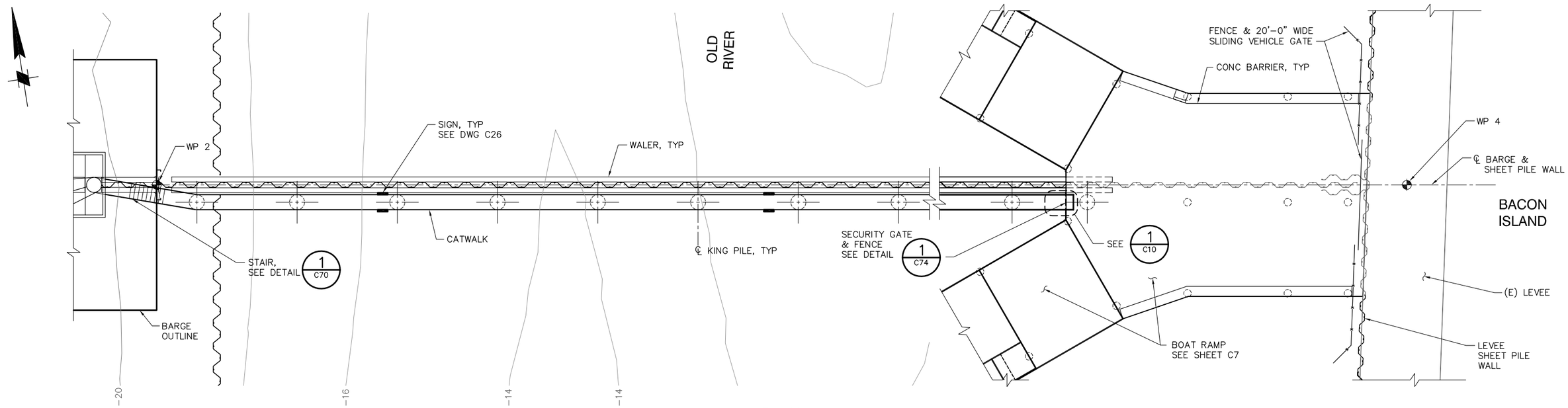

PLAN

SCALE: 1"= 10'

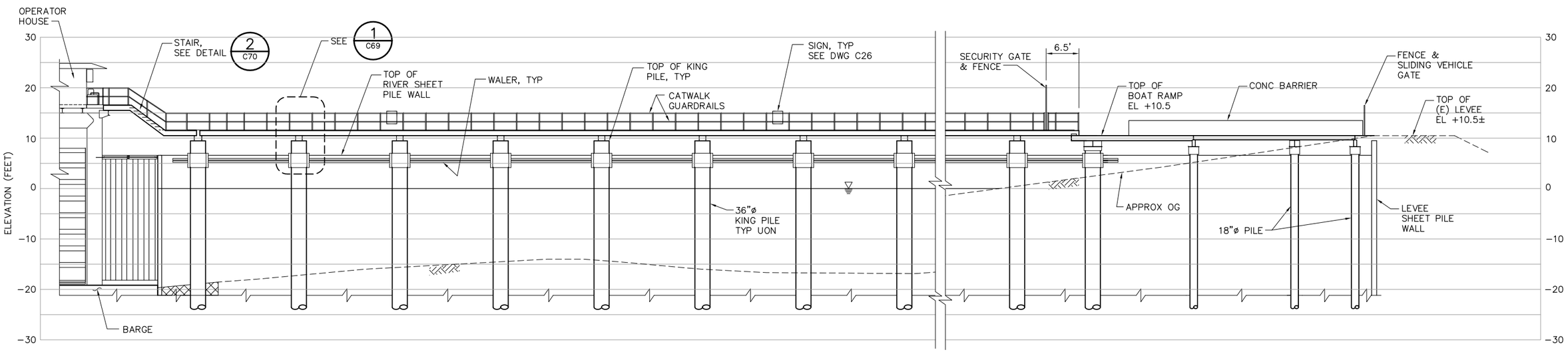

ELEVATION

SCALE: 1"= 10'

NOTE: SUBMERGED SHEET PILE ENCLOSURE NOT SHOWN FOR CLARITY.

10' 0' 10' 20'

SCALE: 1"=10'

100% SUBMITTAL REVISION 1

IF SHEET IS LESS THAN 22" x 34" IT IS A REDUCED PRINT – SCALE REDUCED ACCORDINGLY.

REVISION	DESCRIPTION	BY	DATE

San Luis & Delta-Mendota Water Authority
842 6th Street, Suite 7
PO Box 2157
Los Banos, California 93635

Moffatt & Nichol
2001 N. Main Street, Suite 360
Walnut Creek, California 94596
(925) 944-5411

DSGN	DR	CHK
JMB	EP/AB	TDB
JOB NO. 6097-03	SUBMITTED BY RMR	

2-GATES FISH PROTECTION DEMONSTRATION PROJECT

DATE 10/02/09

SHEET 18 OF 78

OLD RIVER CATWALK PLAN AND ELEVATION, SHEET 2

C12

P:\6097-03 SWC GATE DESIGN\CADD\DWG\609703-C12.DWG 10/1/2009 10:24 AM

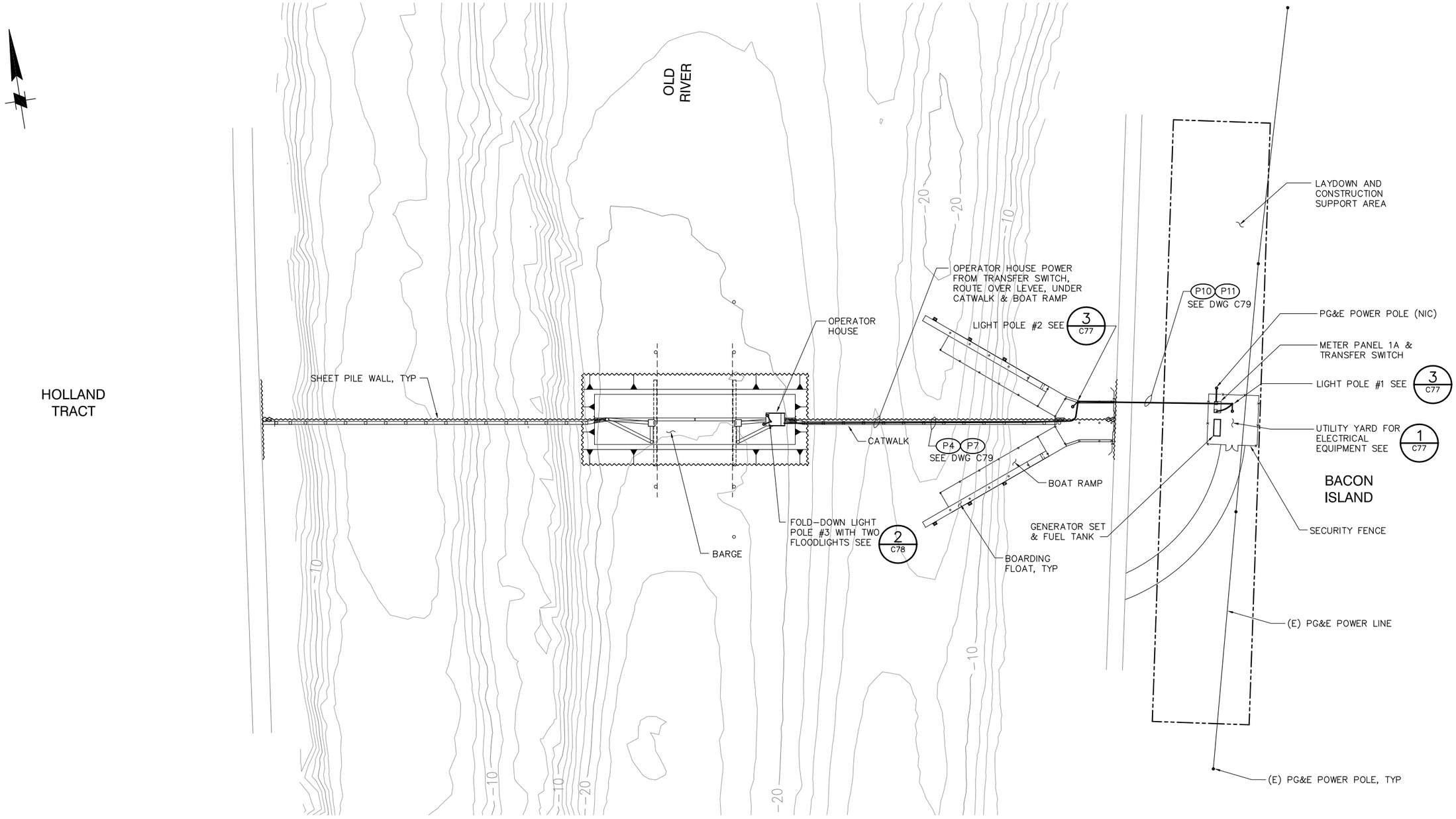

ELECTRICAL SITE PLAN

SCALE: 1"= 50'

50' 0' 50' 100'

SCALE: 1"=50'

100% SUBMITTAL REVISION 1

IF SHEET IS LESS THAN 22" x 34" IT IS A REDUCED PRINT – SCALE REDUCED ACCORDINGLY.

REVISION	DESCRIPTION	BY	DATE

San Luis & Delta-Mendota Water Authority
842 6th Street, Suite 7
PO Box 2157
Los Banos, California 93635

Moffatt & Nichol
2001 N. Main Street, Suite 360
Walnut Creek, California 94596
(925) 944-5411

DSGN	DR	CHK
DM	AB/EP	CBS
JOB NO. 6097-03	SUBMITTED BY RMR	

2-GATES FISH PROTECTION DEMONSTRATION PROJECT

OLD RIVER ELECTRICAL SITE PLAN

DATE 10/02/09

SHEET 19 OF 78

C13

P:\6097-03 SWC GATE DESIGN\CADD\DWG\609703-C13.DWG 10/1/2009 10:43 AM

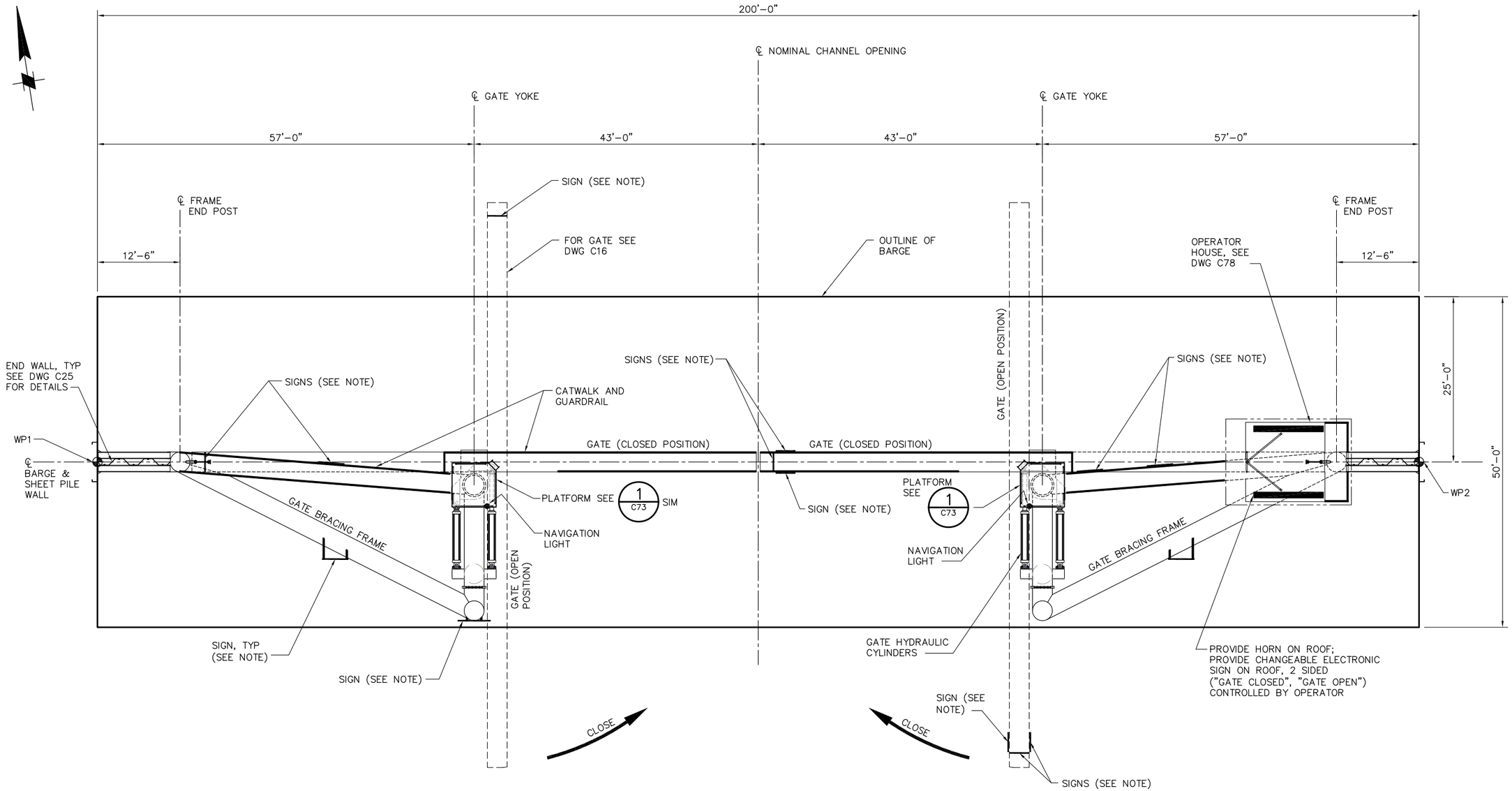

BARGE PLAN

SCALE: 1/8"= 1'-0"

NOTE:

FOR SIGNAGE, SEE DRAWING C26.

8'-0" 0'-0" 8'-0" 16'-0"

SCALE: 1/8"=1'-0"

100% SUBMITTAL REVISION 1

IF SHEET IS LESS THAN 22" x 34" IT IS A REDUCED PRINT – SCALE REDUCED ACCORDINGLY.

REVISION	DESCRIPTION	BY	DATE

San Luis & Delta-Mendota Water Authority
842 6th Street, Suite 7
PO Box 2157
Los Banos, California 93635

Moffatt & Nichol
2001 N. Main Street, Suite 360
Walnut Creek, California 94596
(925) 944-5411

DSGN	DR	CHK
CBS	AB/EP	TDB
JOB NO. 6097-03	SUBMITTED BY RMR	

2-GATES FISH PROTECTION DEMONSTRATION PROJECT

OLD RIVER BARGE GENERAL ARRANGEMENT PLAN

DATE 10/02/09

SHEET 20 OF 78

C14

P:\6097-03 SWC GATE DESIGN\CADD\DWG\609703-C14.DWG 9/29/2009 3:20 PM

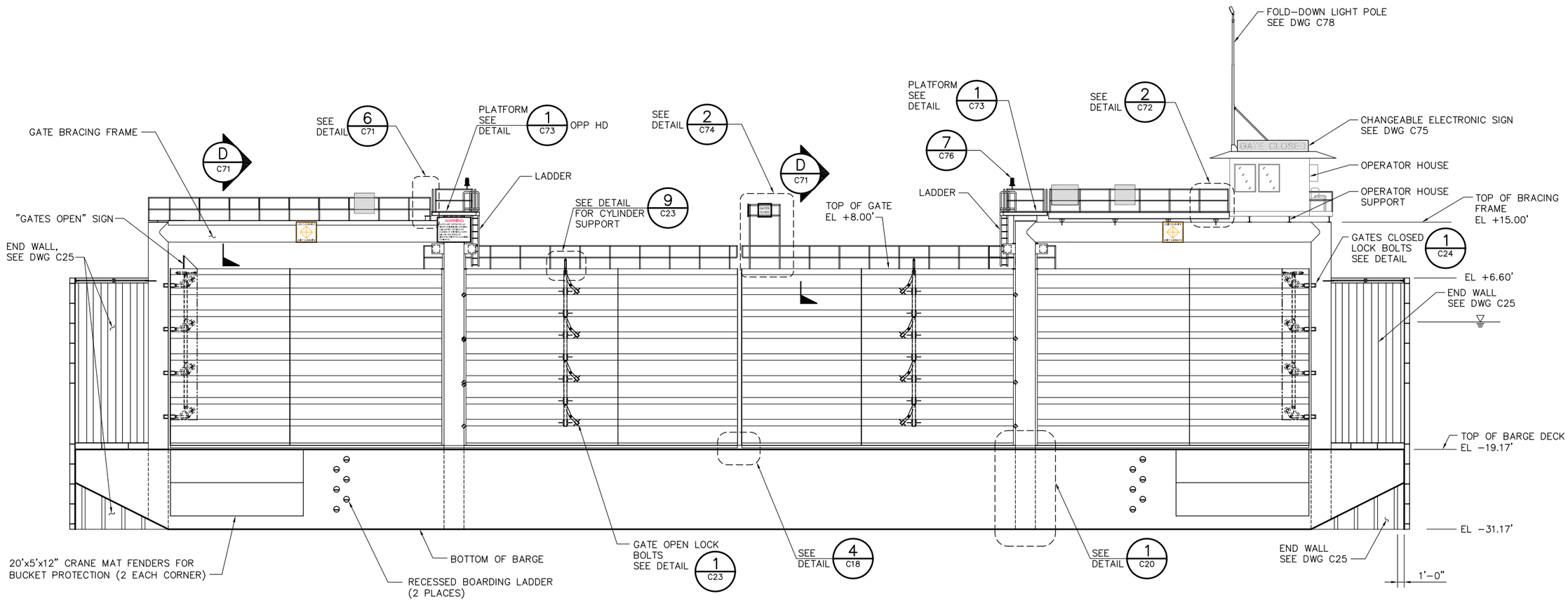

ELEVATION

SCALE: 1/8"= 1'-0"

NOTE: GATES SHOWN IN CLOSED POSITION

NOTES:

1. FOR SIGNAGE SEE DRAWING C26.
2. FOR CATWALK STAIRWAY SEE DRAWINGS C11 AND C12.

8'-0" 0'-0" 8'-0" 16'-0"

SCALE: 1/8"=1'-0"

100% SUBMITTAL REVISION 1

IF SHEET IS LESS THAN 22" x 34" IT IS A REDUCED PRINT – SCALE REDUCED ACCORDINGLY.

REVISION	DESCRIPTION	BY	DATE

San Luis & Delta-Mendota Water Authority
842 6th Street, Suite 7
PO Box 2157
Los Banos, California 93635

Moffatt & Nichol
2001 N. Main Street, Suite 360
Walnut Creek, California 94596
(925) 944-5411

DSGN	DR	CHK
JMB	AB/EP	TDB
JOB NO. 6097-03	SUBMITTED BY RMR	

2-GATES FISH PROTECTION DEMONSTRATION PROJECT

OLD RIVER
BARGE GENERAL ARRANGEMENT
ELEVATION

DATE 10/02/09

SHEET 21 OF 78

C15

P:\6097-03 SWC GATE DESIGN\CADD\DWG\609703-C15.DWG 9/29/2009 3:30 PM

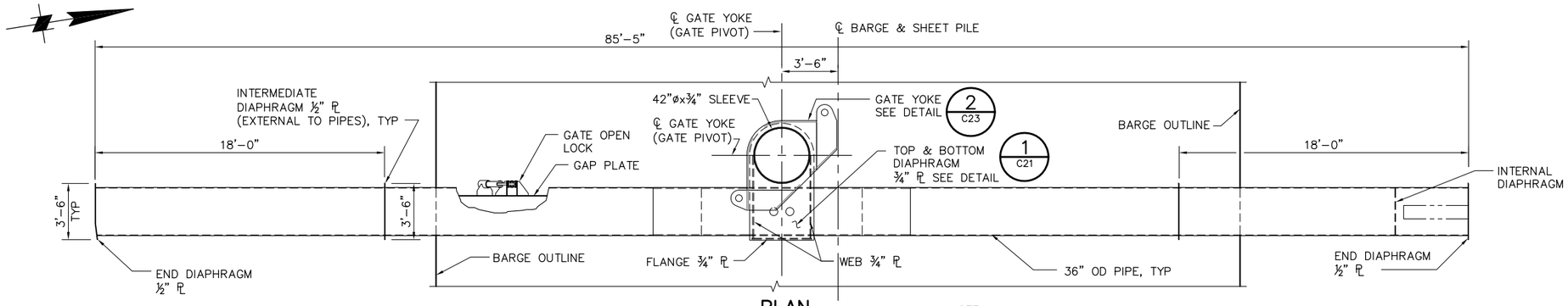

NOTE:
GATE SHOWN IS WEST SIDE. EAST SIDE GATE IS MIRROR IMAGE.

PLAN

SCALE: 1/4"= 1'-0"
(GATE SHOWN IN OPEN POSITION)

NOTE:
TOPPING CHECKERED STEEL ℙ, TOPPING WEB PLATES AND VERTICAL PIVOT NOT SHOWN FOR CLARITY.

WELDING NOTES:

1. ALL GATE AND PIPE FRAMING STRUCTURAL WELDS SHALL BE COMPETE JOINT PENETRATION (CJP) WELDS UON.
2. BACKING BARS SHALL NOT BE LEFT IN PLACE
3. ALL WELDS SHALL BE PREQUALIFIED.
4. ALL WELDING AND NON-DESTRUCTIVE TESTING (N.D.T.) INSPECTIONS SHALL BE IN ACCORDANCE WITH AWS-D1.1.

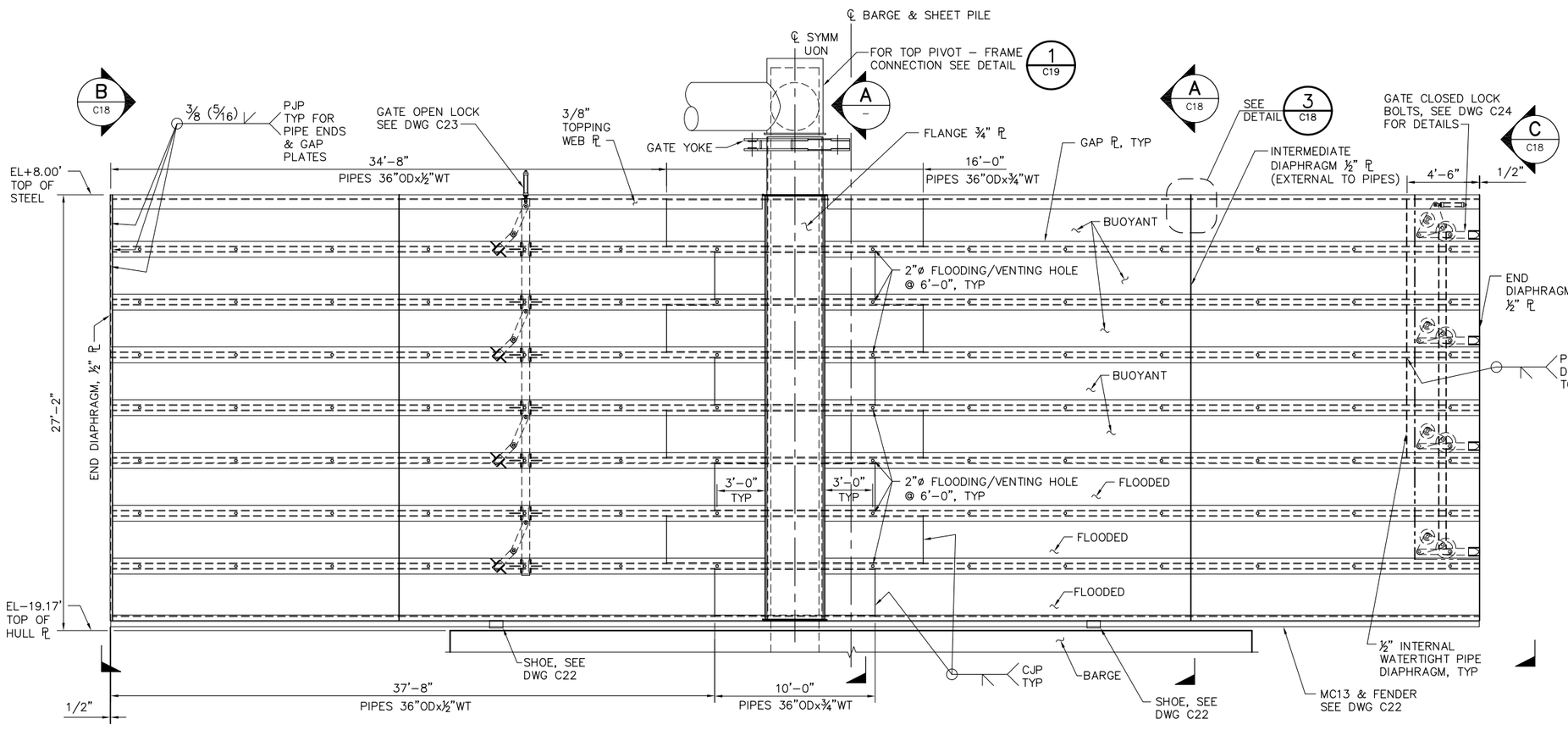

ELEVATION

SCALE: 1/4"= 1'-0"
(GATE SHOWN IN OPEN POSITION)

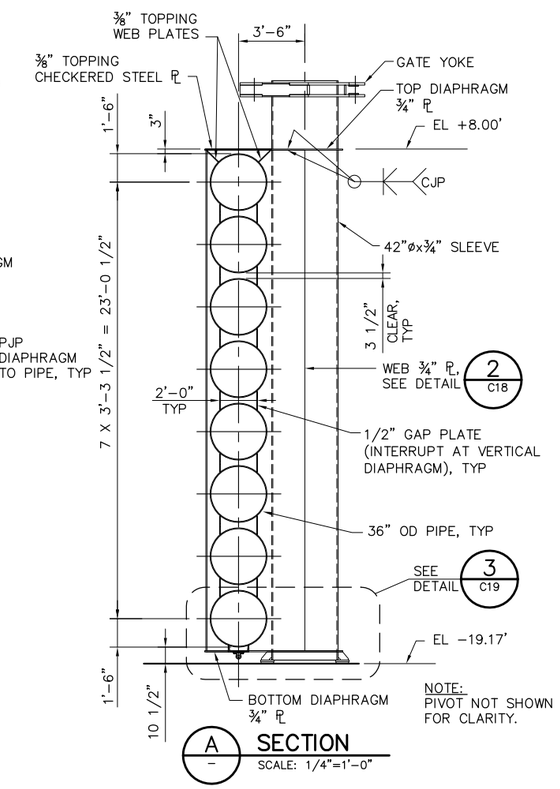

NOTE:
PIVOT NOT SHOWN FOR CLARITY.

A – SECTION

SCALE: 1/4"=1'-0"

4'-0" 0'-0" 4'-0" 8'-0"
SCALE: 1/4"=1'-0"

100% SUBMITTAL REVISION 1

IF SHEET IS LESS THAN 22" x 34" IT IS A REDUCED PRINT – SCALE REDUCED ACCORDINGLY.

REVISION	DESCRIPTION	BY	DATE

San Luis & Delta-Mendota Water Authority
842 6th Street, Suite 7
PO Box 2157
Los Banos, California 93635

Moffatt & Nichol
2001 N. Main Street, Suite 360
Walnut Creek, California 94596
(925) 944-5411

DSGN	DR	CHK
JMB	AB/EP	TDB
JOB NO. 6097-03	SUBMITTED BY RMR	

2-GATES FISH PROTECTION DEMONSTRATION PROJECT

OLD RIVER GATE SCANTLINGS

DATE 10/02/09

SHEET 22 OF 78

C16

P:\6097-03 SWC GATE DESIGN\CADD\DWG\609703-C16.DWG 10/1/2009 8:46 AM

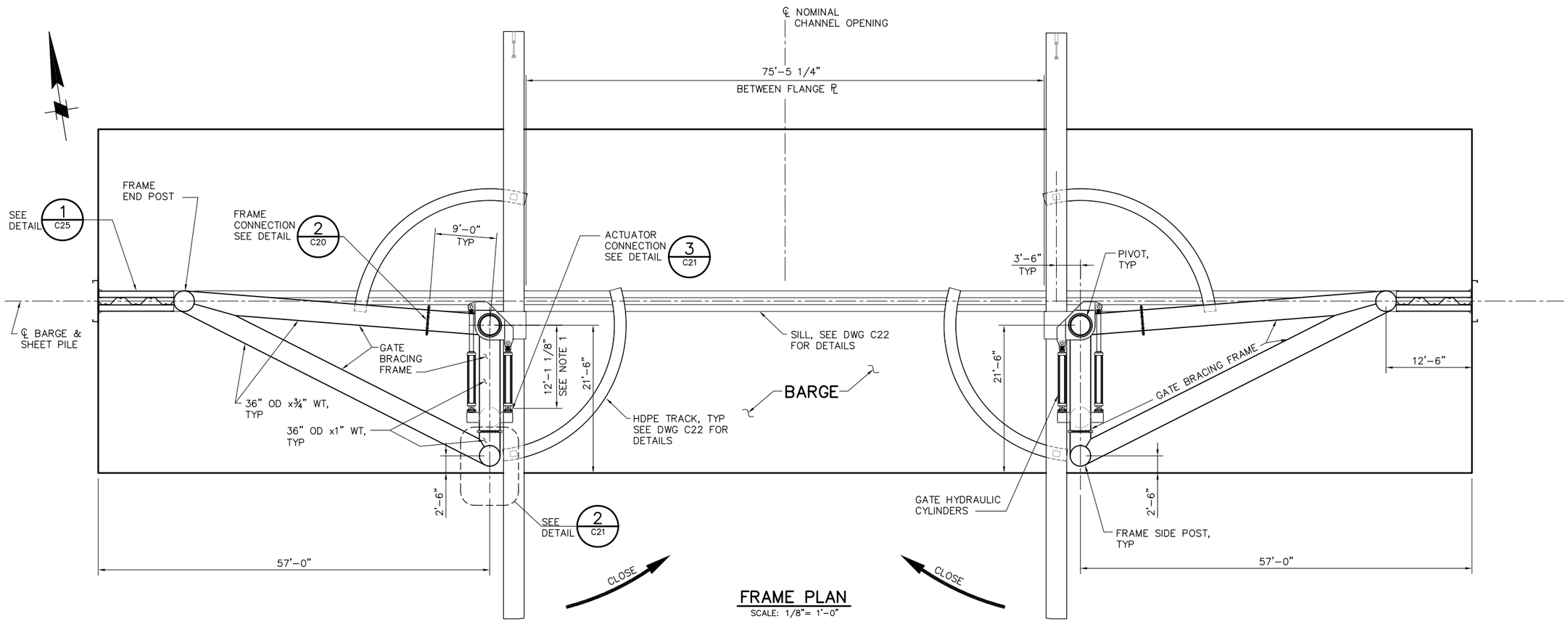

FRAME PLAN

SCALE: 1/8"= 1'-0"

(GATE SHOWN IN OPEN POSITION)

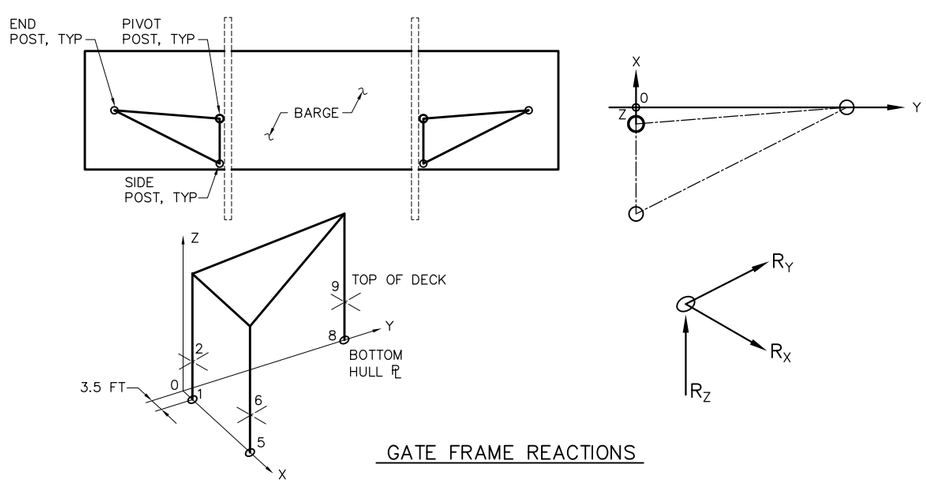

GATE FRAME REACTIONS

SERVICE LOAD REACTIONS (INCLUDES A 1.2 FACTOR)
(FOR LRFD USE A 1.6 FACTOR WITH THESE REACTIONS)

LOCATION ON BARGE	NODE	R_X (KIP)	R_Y (KIP)	R_Z (KIP)	DESCRIPTION
BOTTOM HULL ℙ	1	+240 −240	+30 −30	+300 −130	PIVOT
	5	+250 −250	−60 +60	−130 +230	SIDE POST
	8	+50 −50	+40 −40	+100	END POST
TOP OF DECK	2	+710 −710	−50 +50	0	PIVOT
	6	+410 −410	−90 +90	0	SIDE POST
	9	+100 −100	−70 +70	0	END POST

NOTE: CONTRACTOR SHALL PROVIDE A BARGE ADEQUATE TO SUPPORT THESE LOADS.

NOTES:

1. DIMENSION MAY VARY DEPENDING ON ACTUATOR VENDER.

8'-0" 0'-0" 8'-0" 16'-0"

SCALE: 1/8"=1'-0"

100% SUBMITTAL REVISION 1

IF SHEET IS LESS THAN 22" x 34" IT IS A REDUCED PRINT – SCALE REDUCED ACCORDINGLY.

REVISION	DESCRIPTION	BY	DATE

San Luis & Delta-Mendota Water Authority
842 6th Street, Suite 7
PO Box 2157
Los Banos, California 93635

Moffatt & Nichol
2001 N. Main Street, Suite 360
Walnut Creek, California 94596
(925) 944-5411

DSGN	DR	CHK
CBS	AB	TDB
JOB NO. 6097-03	SUBMITTED BY RMR	

2-GATES FISH PROTECTION DEMONSTRATION PROJECT

OLD RIVER GATE FRAMING LAYOUT

DATE 10/02/09

SHEET 23 OF 78

C17

P:\6097-03 SWC GATE DESIGN\CADD\DWG\609703-C17.DWG 9/29/2009 11:54 AM

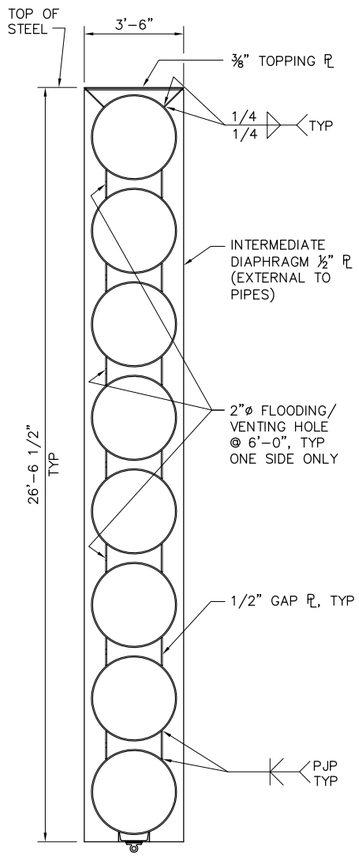

A C16 SECTION
SCALE: 3/8"=1'-0"

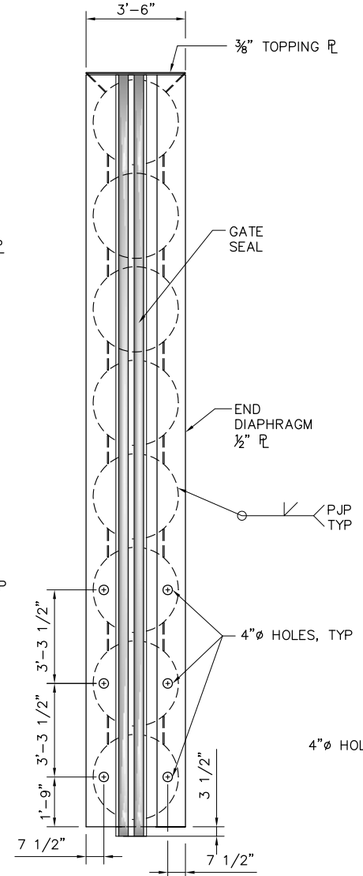

B C16 ELEVATION
SCALE: 3/8"=1'-0"

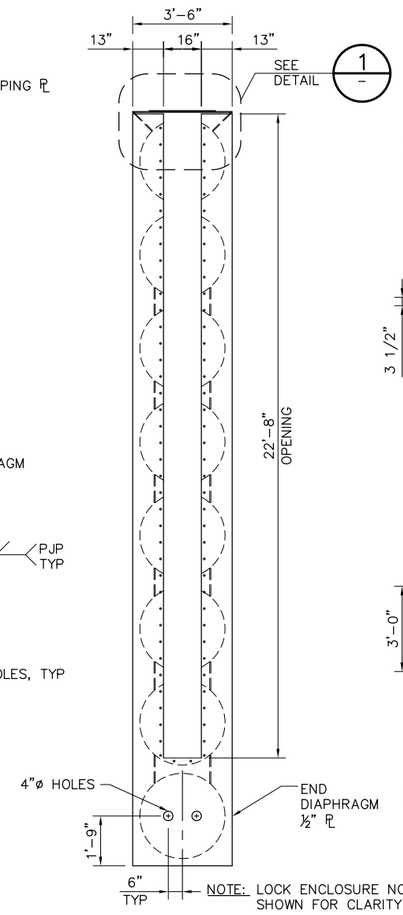

C C16 ELEVATION
SCALE: 3/8"=1'-0"

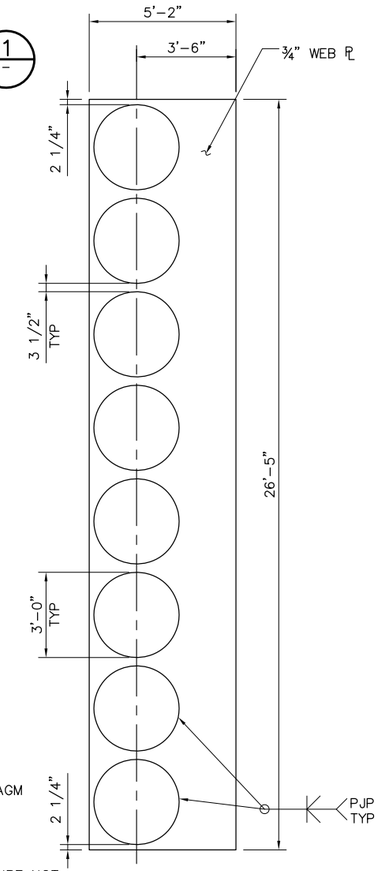

2 C16 WEB PLATE DETAIL
SCALE: 3/8"=1'-0"

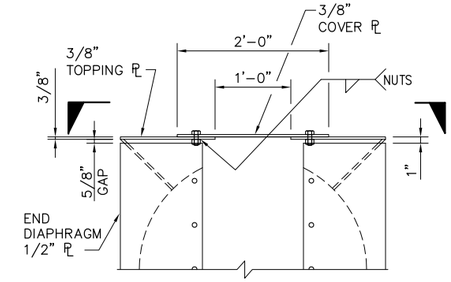

1 DETAIL
SCALE: 1" = 1'-0"

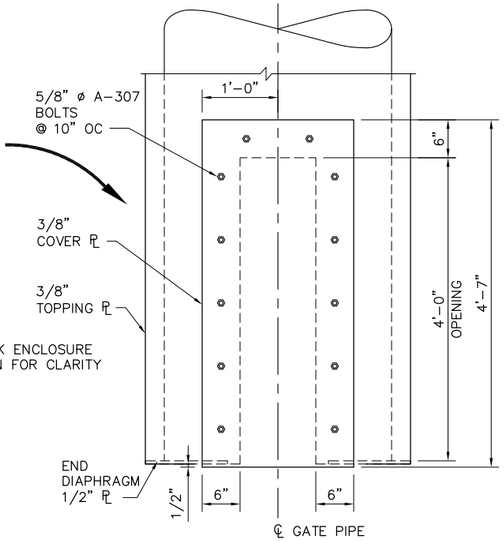

NOTE: LOCK ENCLOSURE NOT SHOWN FOR CLARITY

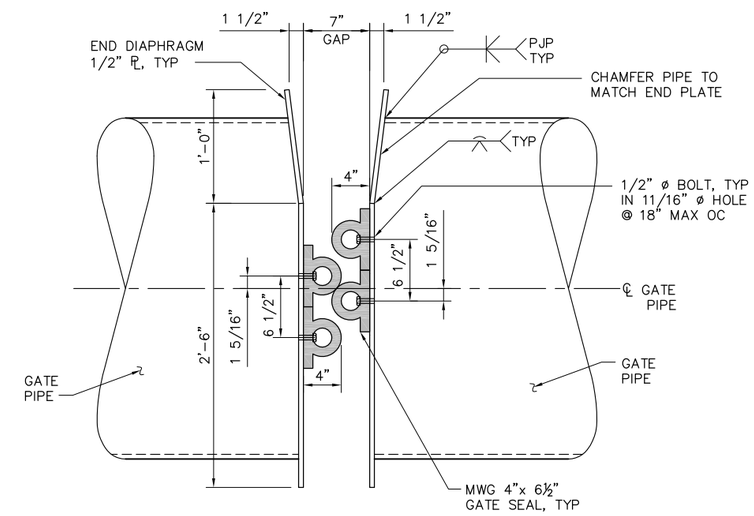

D SECTION
SCALE: 1 1/2" = 1'-0"

NOTE:

CHAMFER CATWALK TOPPING CHECKER PL ABOVE GATE MATING ENDS, TO PERMIT RELATIVE OPENING MOVEMENTS.

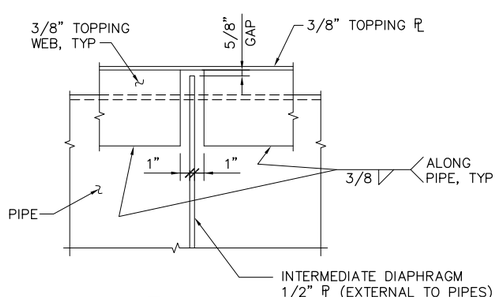

3 C16 DETAIL
SCALE: 1 1/2" = 1'-0"

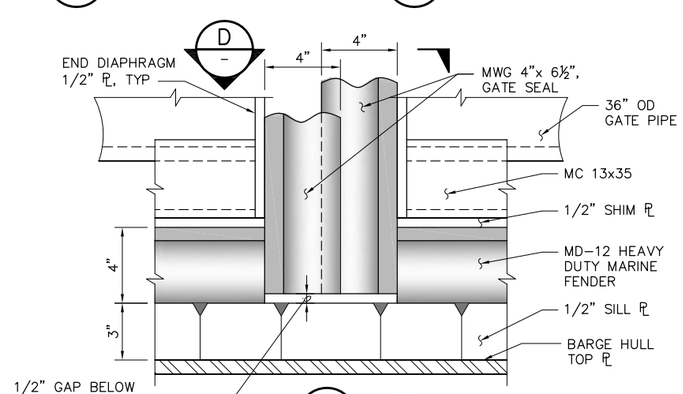

4 C15 DETAIL
SCALE: 3" = 1'-0"

1'-0" 0'-0" 6" 1'-0"
SCALE: 1 1/2"=1'-0"

4'-0" 0'-0" 2'-0" 4'-0"
SCALE: 3/8"=1'-0"

100% SUBMITTAL REVISION 1

IF SHEET IS LESS THAN 22" x 34" IT IS A REDUCED PRINT – SCALE REDUCED ACCORDINGLY.

REVISION	DESCRIPTION	BY	DATE

San Luis & Delta-Mendota Water Authority
842 6th Street, Suite 7
PO Box 2157
Los Banos, California 93635

Moffatt & Nichol
2001 N. Main Street, Suite 360
Walnut Creek, California 94596
(925) 944-5411

DSGN	DR	CHK
JMB	AB/EP	TDB
JOB NO. 6097-03	SUBMITTED BY RMR	

2-GATES FISH PROTECTION DEMONSTRATION PROJECT

OLD RIVER
GATE STRUCTURAL DETAILS , SHEET 1

DATE 10/02/09

SHEET 24 OF 78

C18

P:\6097-03 SWC GATE DESIGN\CADD\DWG\609703-C18.DWG 10/1/2009 8:54 AM

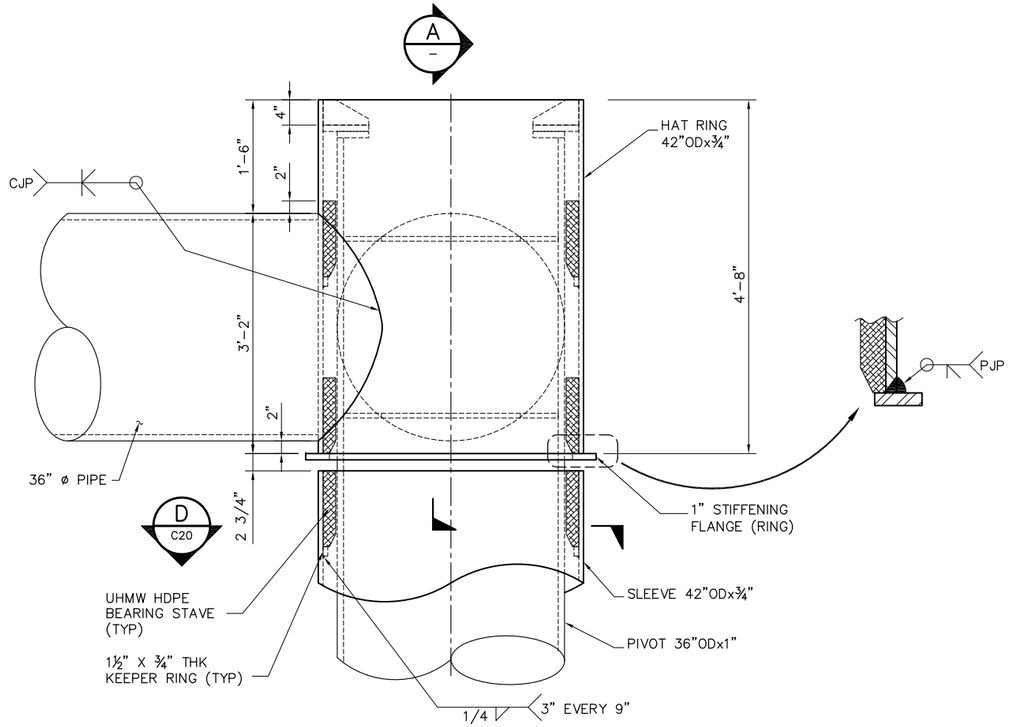

1 C16 TOP PIVOT – FRAME CONNECTION
SCALE: 1" = 1'–0"

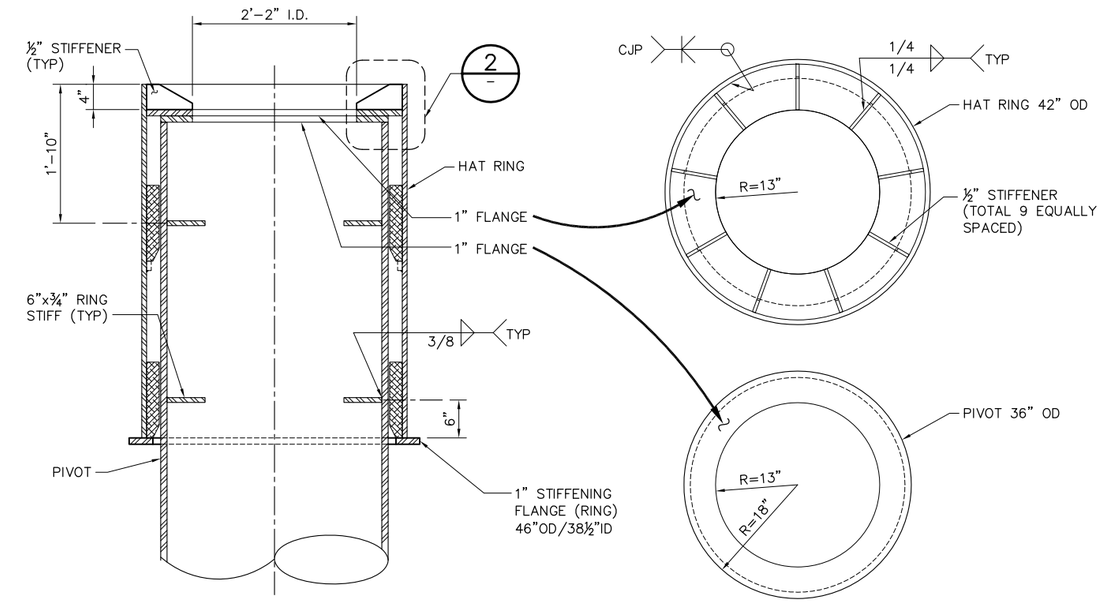

A – SECTION
SCALE: 1" = 1'–0"

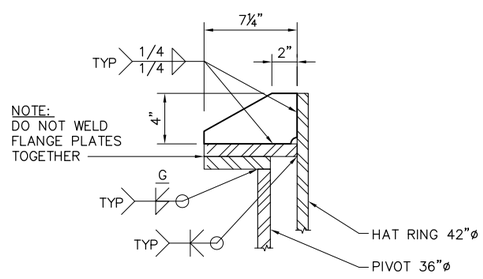

2 – DETAIL
NTS

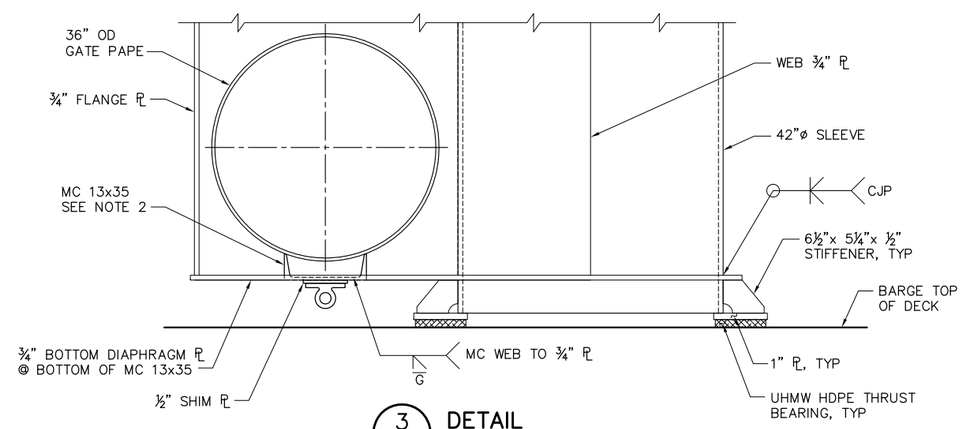

3 C16 DETAIL
SCALE: 1" = 1'–0"

NOTES:

1. ALL STIFFENER WELDS SHALL BE SYMMETRICAL ¼" MIN. FILLET WELDS U.N.O.
2. NOTCH MC 13x35 WEB AROUND BOTTOM DIAPHRAGM PLATE AND WELD AS SHOWN.

1'–0" 0'–0" 1'–0" 2'–0"
SCALE: 1"=1'–0"

100% SUBMITTAL REVISION 1

IF SHEET IS LESS THAN 22" x 34" IT IS A REDUCED PRINT – SCALE REDUCED ACCORDINGLY.

REVISION	DESCRIPTION	BY	DATE

San Luis & Delta–Mendota Water Authority
842 6th Street, Suite 7
PO Box 2157
Los Banos, California 93635

Moffatt & Nichol
2001 N. Main Street, Suite 360
Walnut Creek, California 94596
(925) 944–5411

DSGN	DR	CHK
JMB/CBS	AB/EP	TDB
JOB NO. 6097–03	SUBMITTED BY RMR	

2–GATES FISH PROTECTION DEMONSTRATION PROJECT

OLD RIVER
GATE STRUCTURAL DETAILS
SHEET 2

DATE 10/02/09

SHEET 25 OF 78

C19

P:\6097–03 SWC GATE DESIGN\CADD\DWG\609703–C19.DWG 9/29/2009 2:20 PM

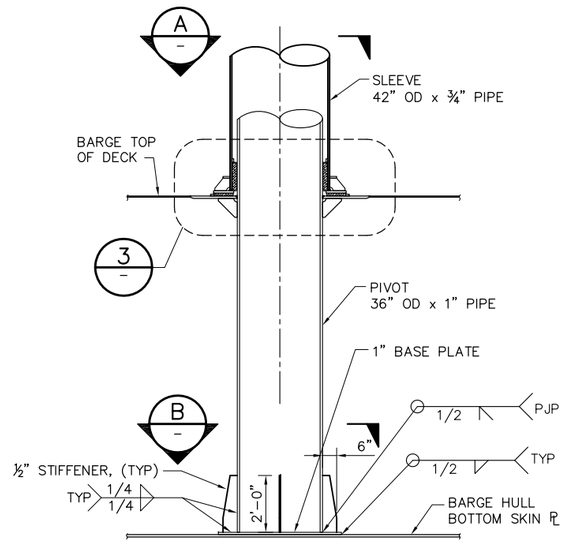

1 C15 FRAMING PIVOT CONNECTION
SCALE: 3/8" = 1'-0"

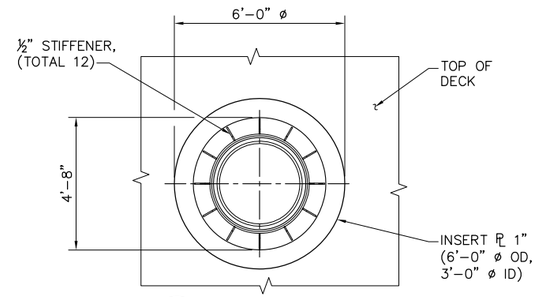

A – SECTION
SCALE: 3/8" = 1'-0"

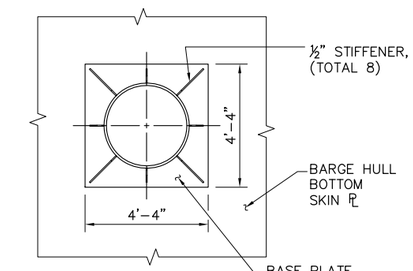

B – SECTION
SCALE: 3/8" = 1'-0"
C21

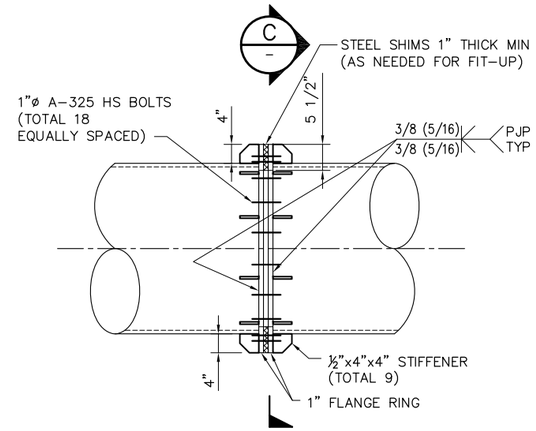

2 C17 FRAME CONNECTION
SCALE: 3/4" = 1'-0"
C21

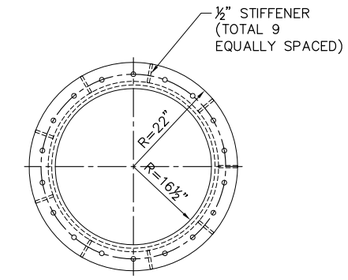

C – SECTION
SCALE: 3/4" = 1'-0"

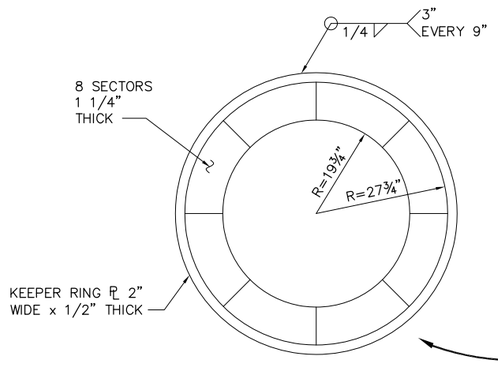

UHMW HDPE
THRUST BEARING

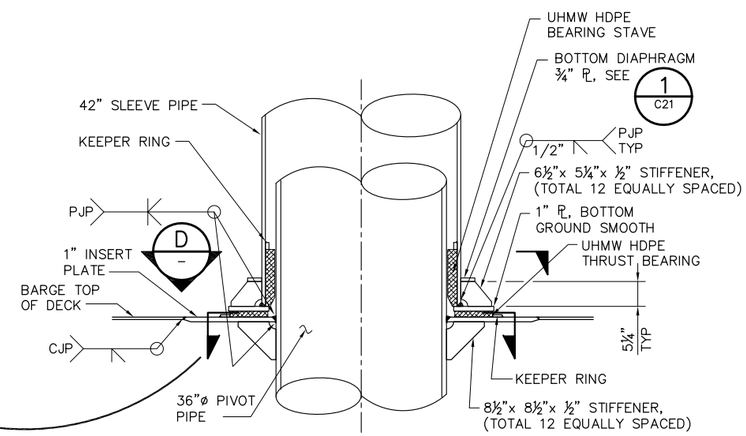

3 – DETAIL
SCALE: 3/4" = 1'-0"

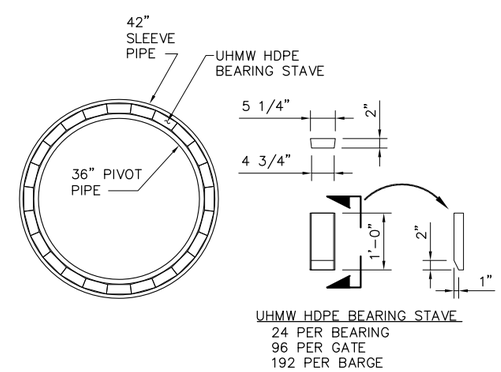

UHMW HDPE BEARING STAVE
24 PER BEARING
96 PER GATE
192 PER BARGE

D – SECTION
SCALE: 3/4" = 1'-0"
C19

NOTES:

1. ALL STIFFENER WELDS SHALL BE SYMMETRICAL ¼" MIN. FILLET WELDS U.N.O.

2'-0" 0'-0" 1'-0" 2'-0"
SCALE: 3/4"=1'-0"

4'-0" 0'-0" 2'-0" 4'-0"
SCALE: 3/8"=1'-0"

100% SUBMITTAL REVISION 1

IF SHEET IS LESS THAN 22" x 34" IT IS A REDUCED PRINT – SCALE REDUCED ACCORDINGLY.

REVISION	DESCRIPTION	BY	DATE

San Luis & Delta-Mendota Water Authority
842 6th Street, Suite 7
PO Box 2157
Los Banos, California 93635

Moffatt & Nichol
2001 N. Main Street, Suite 360
Walnut Creek, California 94596
(925) 944-5411

DSGN	DR	CHK
JMB/CBS	AB/EP	TDB
JOB NO. 6097-03	SUBMITTED BY RMR	

2-GATES FISH PROTECTION DEMONSTRATION PROJECT

OLD RIVER
GATE STRUCTURAL DETAILS
SHEET 3

DATE 10/02/09
SHEET 26 OF 78
C20

P:\6097-03 SWC GATE DESIGN\CADD\DWG\609703-C20.DWG 9/29/2009 11:27 AM

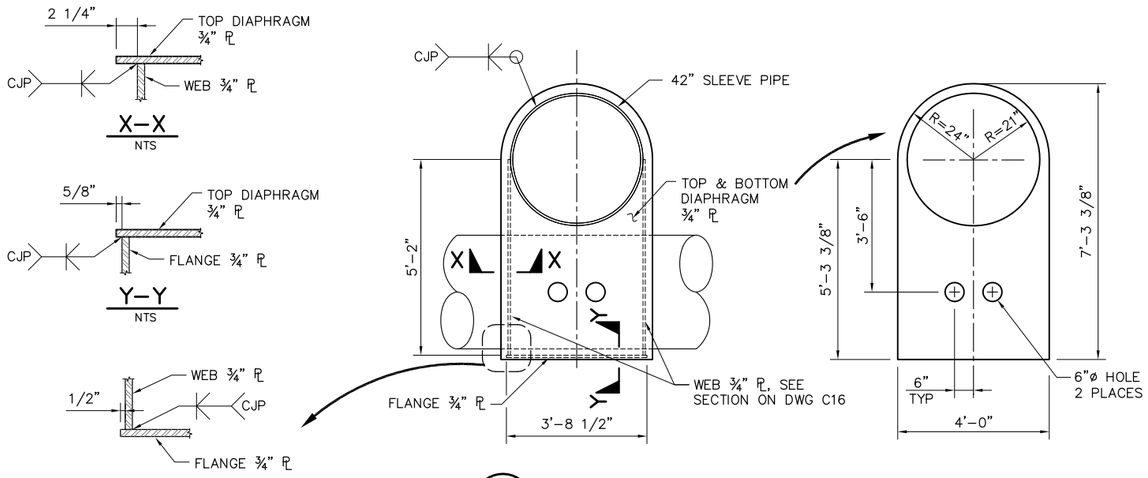

1 / C16 SLEEVE CONNECTION DETAIL
SCALE: 1/2" = 1'–0"

C20

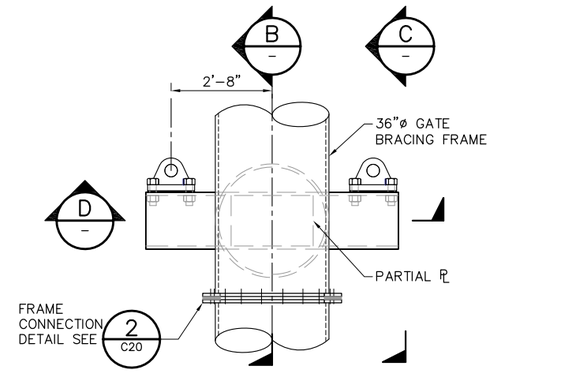

NOTE: CONNECTION STRUT NOT SHOWN.

3 / C17 PLAN – ACTUATOR CONNECTION DETAIL
SCALE: 1/2" = 1'–0"

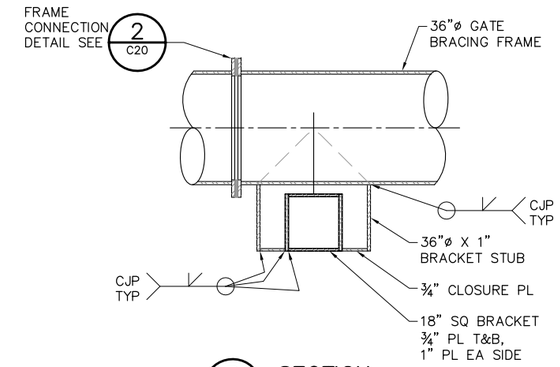

B SECTION
SCALE: 1/2" = 1'–0"

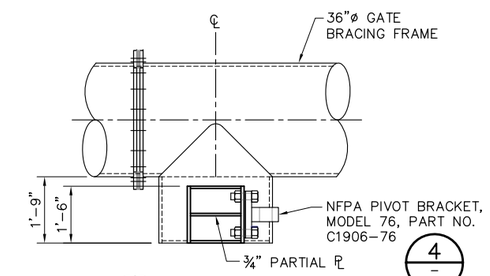

4

C SECTION
SCALE: 1/2" = 1'–0"

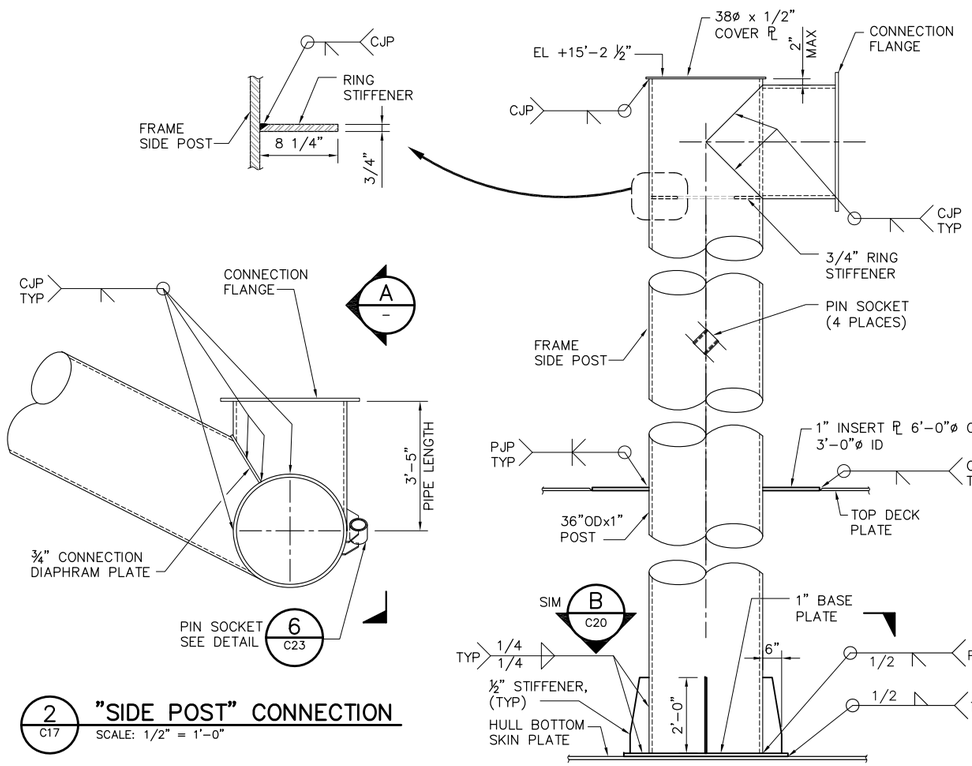

2 / C17 "SIDE POST" CONNECTION
SCALE: 1/2" = 1'–0"

A ELEVATION
SCALE: 1/2" = 1'–0"

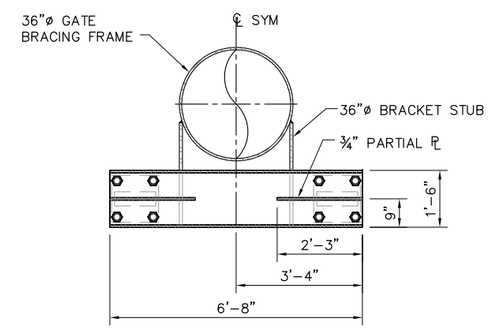

D SECTION
SCALE: 1/2" = 1'–0"

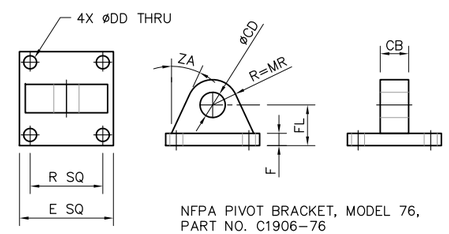

NFPA PIVOT BRACKET, MODEL 76, PART NO. C1906–76

CB	CD	DD	E	F	FL	MR	R	ZA
4.500	4.000	2.062	14.875	1.938	6.438	4.000	11.500	25°

4 DETAIL
SCALE: 1"=1'–0"

2'–0" 0'–0" 2'–0" 4'–0"
SCALE: 1/2"=1'–0"

100% SUBMITTAL REVISION 1

IF SHEET IS LESS THAN 22" x 34" IT IS A REDUCED PRINT – SCALE REDUCED ACCORDINGLY.

REVISION	DESCRIPTION	BY	DATE

San Luis & Delta–Mendota Water Authority
842 6th Street, Suite 7
PO Box 2157
Los Banos, California 93635

Moffatt & Nichol
2001 N. Main Street, Suite 360
Walnut Creek, California 94596
(925) 944–5411

DSGN	DR	CHK
JMB	AB/EP	CBS
JOB NO. 6097–03	SUBMITTED BY RMR	

2–GATES FISH PROTECTION DEMONSTRATION PROJECT

OLD RIVER GATE STRUCTURAL DETAILS, SHEET 4

DATE 10/02/09

SHEET 27 OF 78

C21

P:\6097–03 SWC GATE DESIGN\CADD\DWG\609703–C21.DWG 9/29/2009 3:48 PM

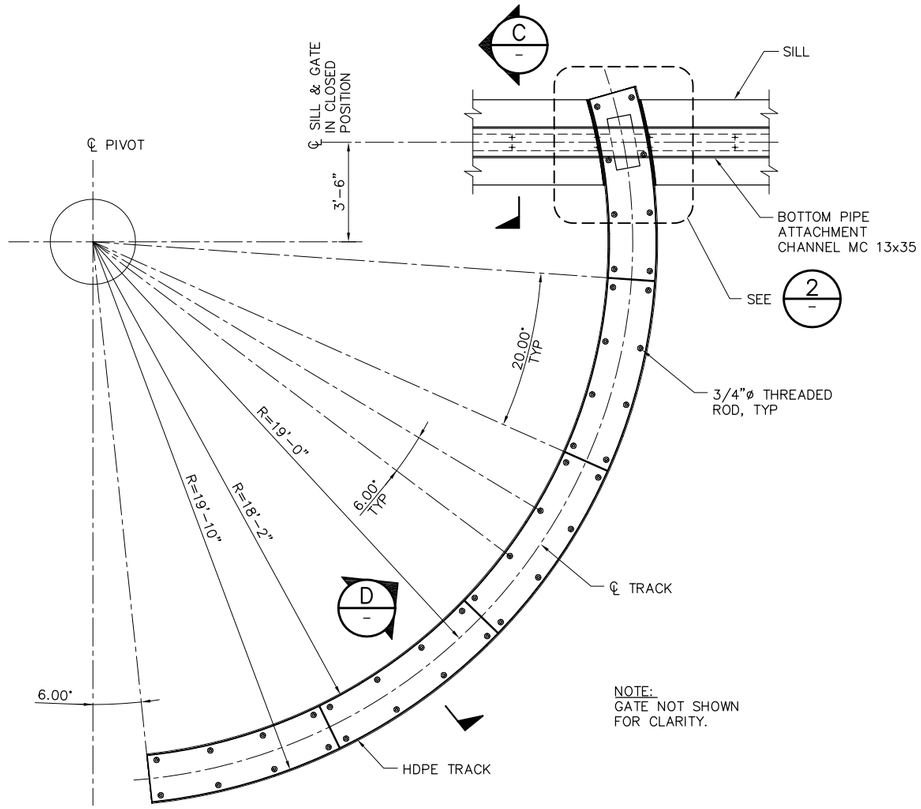

NOTE:
GATE NOT SHOWN FOR CLARITY.

1 TRACK DETAIL
SCALE: 3/8" = 1'-0"

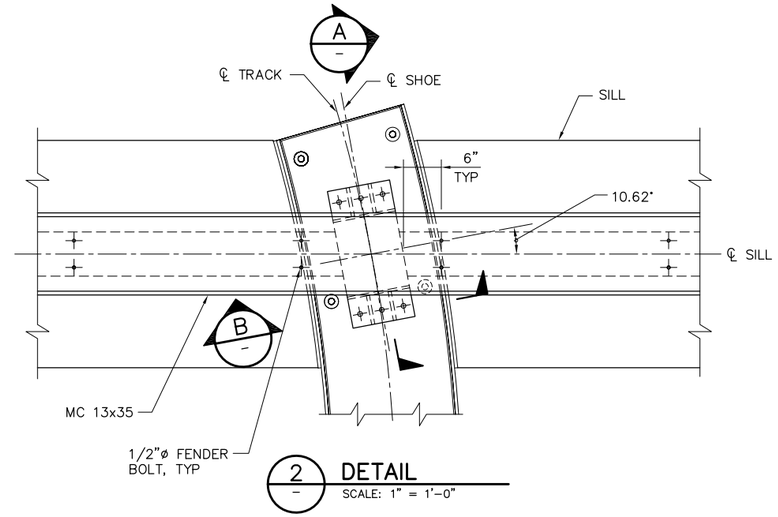

2 DETAIL
SCALE: 1" = 1'-0"

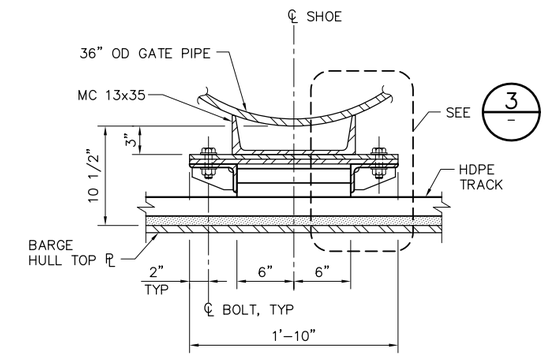

A SECTION
SCALE: 1 1/2" = 1'-0"

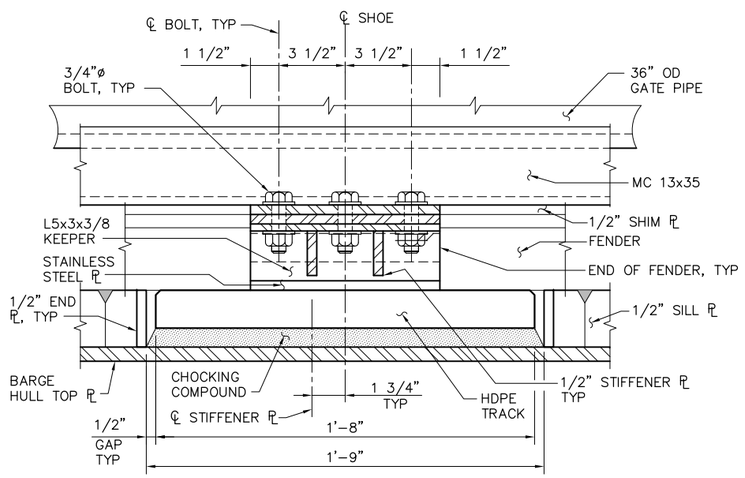

B SECTION
SCALE: 3" = 1'-0"

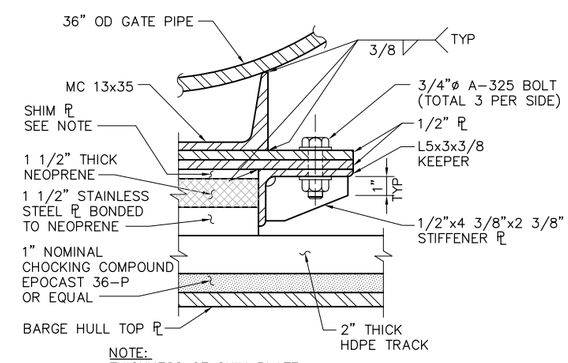

NOTE:
THICKNESS OF SHIM PLATE TO PROVIDE ~1 KIP PRELOAD.

3 DETAIL
SCALE: 3" = 1'-0"

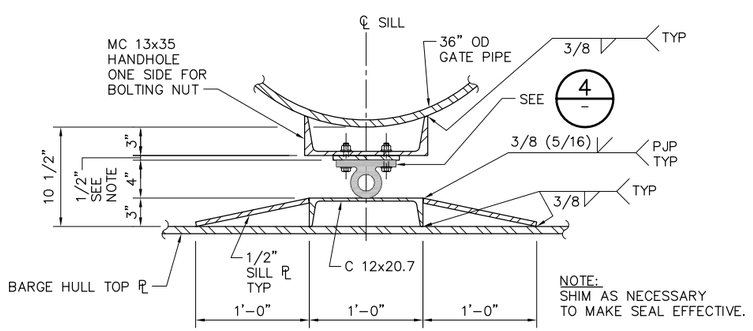

NOTE:
SHIM AS NECESSARY TO MAKE SEAL EFFECTIVE.

C SECTION
SCALE: 1 1/2" = 1'-0"

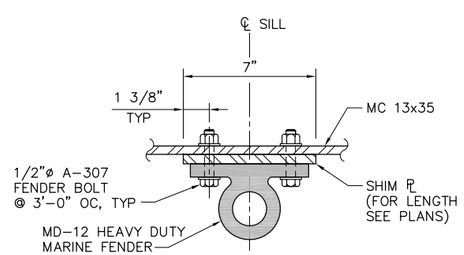

4 DETAIL
SCALE: 3" = 1'-0"

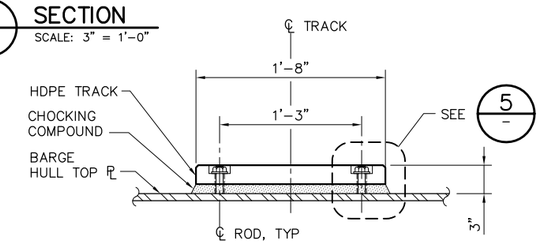

D SECTION
SCALE: 1 1/2" = 1'-0"

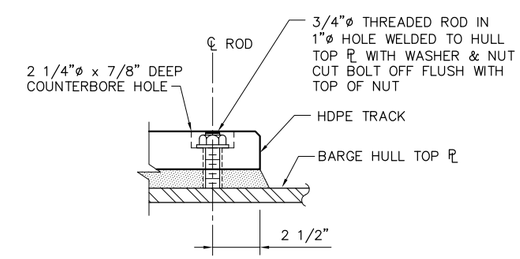

5 DETAIL
SCALE: 3" = 1'-0"

4'-0" 0'-0" 2'-0" 4'-0"
SCALE: 3/8"=1'-0"

100% SUBMITTAL REVISION 1

IF SHEET IS LESS THAN 22" x 34" IT IS A REDUCED PRINT – SCALE REDUCED ACCORDINGLY.

REVISION	DESCRIPTION	BY	DATE

San Luis & Delta-Mendota Water Authority
842 6th Street, Suite 7
PO Box 2157
Los Banos, California 93635

Moffatt & Nichol
2001 N. Main Street, Suite 360
Walnut Creek, California 94596
(925) 944-5411

DSGN	DR	CHK
JMB	AB	CBS
JOB NO. 6097-03	SUBMITTED BY RMR	

2-GATES FISH PROTECTION DEMONSTRATION PROJECT

OLD RIVER
GATE STRUCTURAL DETAILS, SHEET 5

DATE 10/02/09

SHEET 28 OF 78

C22

P:\6097-03 SWC GATE DESIGN\CADD\DWG\609703-C22.DWG 9/1/2009 9:37 AM

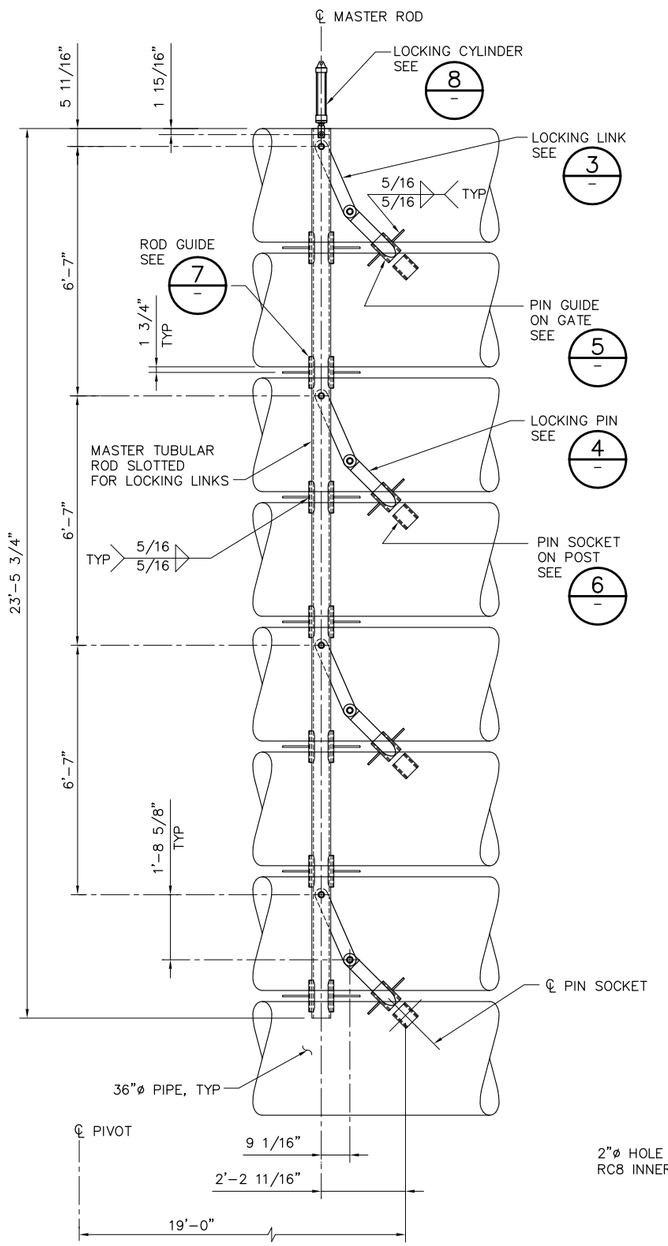

1 GATE OPEN LOCK (UNLOCKED) DETAIL
C15
SCALE: 1/2" = 1'-0"

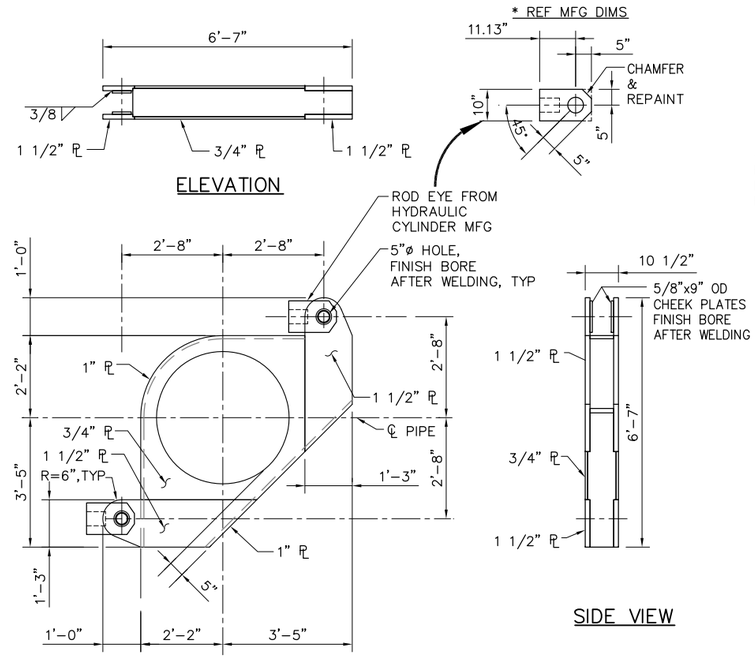

2 GATE YOKE DETAIL
C16
SCALE: 1/2" = 1'-0"

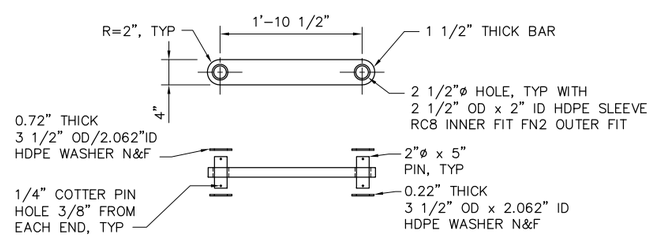

3 LOCKING LINK DETAIL
SCALE: 1" = 1'-0"

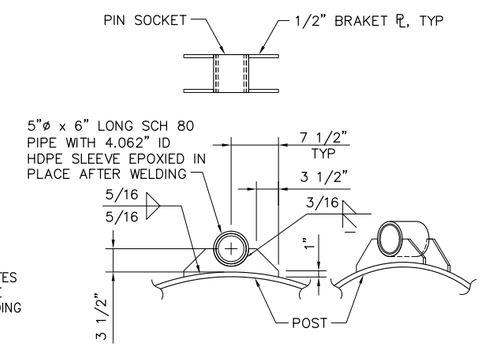

6 PIN SOCKET DETAIL
C21
SCALE: 1" = 1'-0"

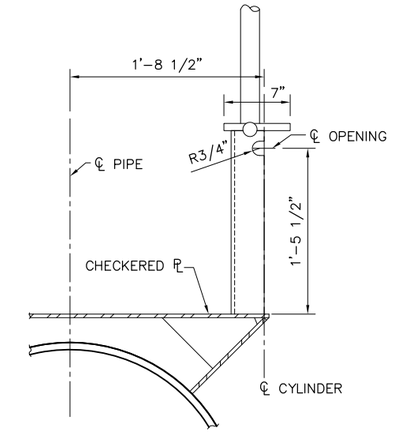

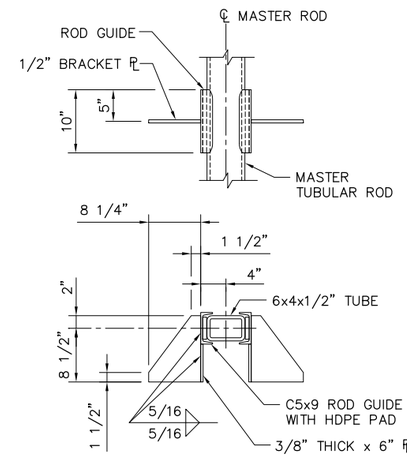

7 ROD GUIDE DETAIL
SCALE: 1" = 1'-0"

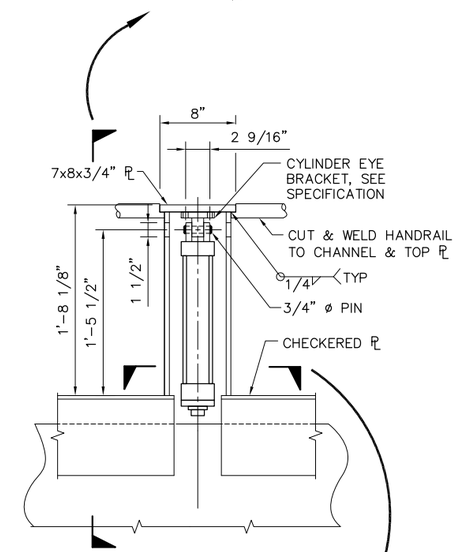

9 CYLINDER SUPPORT DETAIL
C15
SCALE: 1 1/2" = 1'-0"

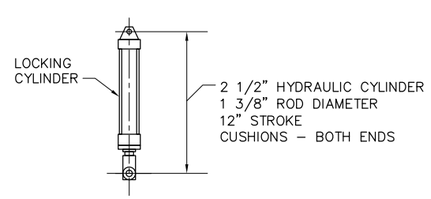

8 LOCKING CYLINDER DETAIL
SCALE: 1" = 1'-0"

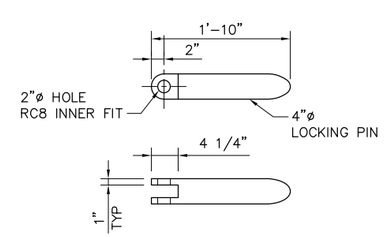

4 LOCKING PIN DETAIL
SCALE: 1" = 1'-0"

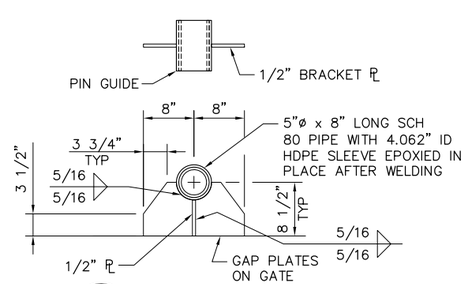

5 PIN GUIDE DETAIL
SCALE: 1" = 1'-0"

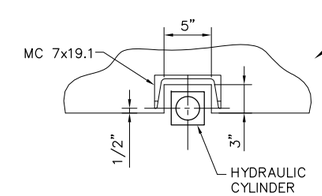

1'-0" 0'-0" 1'-0" 2'-0"
SCALE: 1"=1'-0"

100% SUBMITTAL REVISION 1

IF SHEET IS LESS THAN 22" x 34" IT IS A REDUCED PRINT – SCALE REDUCED ACCORDINGLY.

REVISION	DESCRIPTION	BY	DATE

San Luis & Delta-Mendota Water Authority
842 6th Street, Suite 7
PO Box 2157
Los Banos, California 93635

Moffatt & Nichol
2001 N. Main Street, Suite 360
Walnut Creek, California 94596
(925) 944-5411

DSGN	DR	CHK
CBS	AB/TAE	TDB
JOB NO. 6097-03	SUBMITTED BY RMR	

2-GATES FISH PROTECTION DEMONSTRATION PROJECT

OLD RIVER
GATE MECHANICAL DETAILS
SHEET 1

DATE 10/02/09
SHEET 29 OF 78
C23

P:\6097-03 SWC GATE DESIGN\CADD\DWG\609703-C23.DWG 9/1/2009 9:38 AM

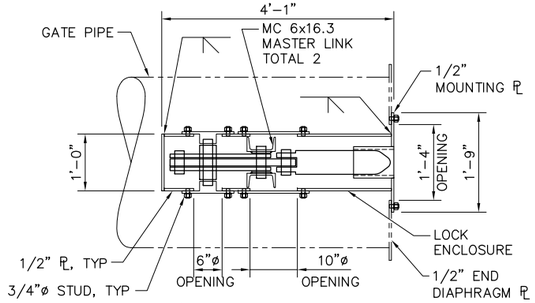

A SECTION
SCALE: 3/4" = 1'-0"

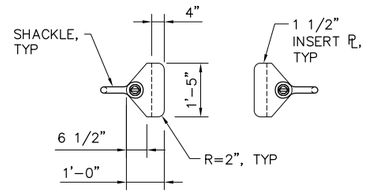

B SECTION
SCALE: 1/2" = 1'-0"

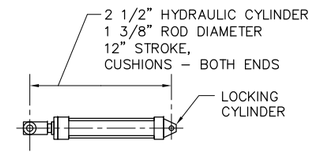

3 LOCKING CYLINDER DETAIL
SCALE: 1" = 1'-0"

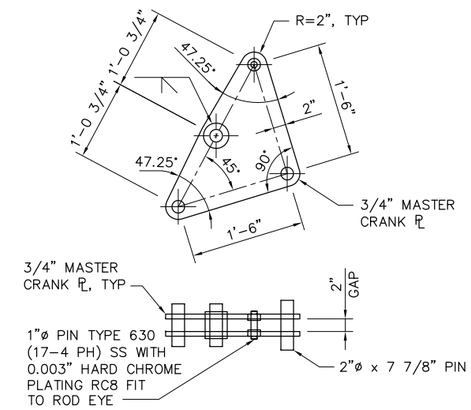

4 MASTER CRANK DETAIL
SCALE: 1" = 1'-0"

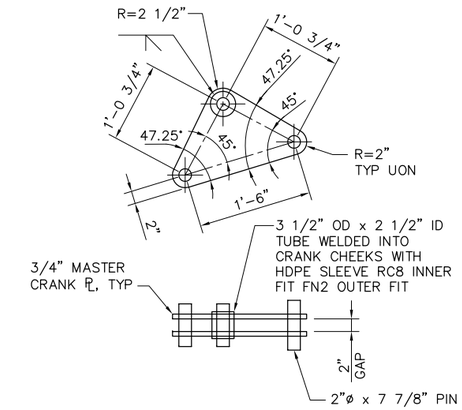

5 LOCKING CRANK DETAIL
SCALE: 1" = 1'-0"

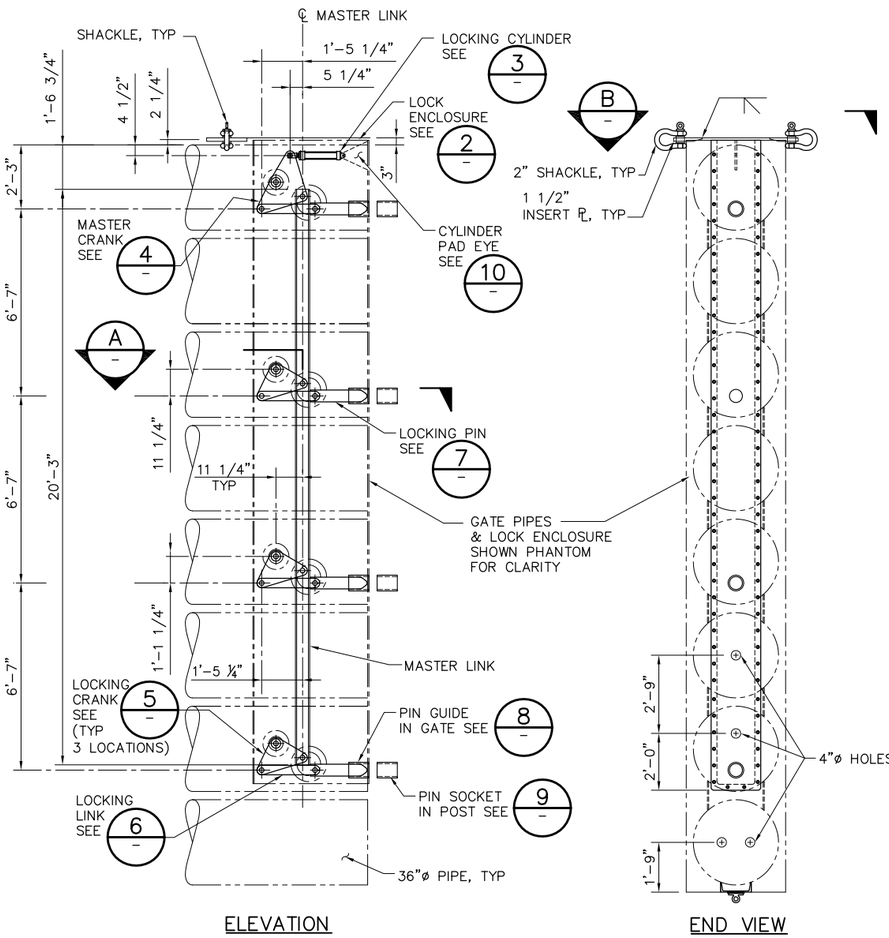

1 C15 GATE CLOSED LOCK (UNLOCKED) DETAIL
SCALE: 3/8" = 1'-0"

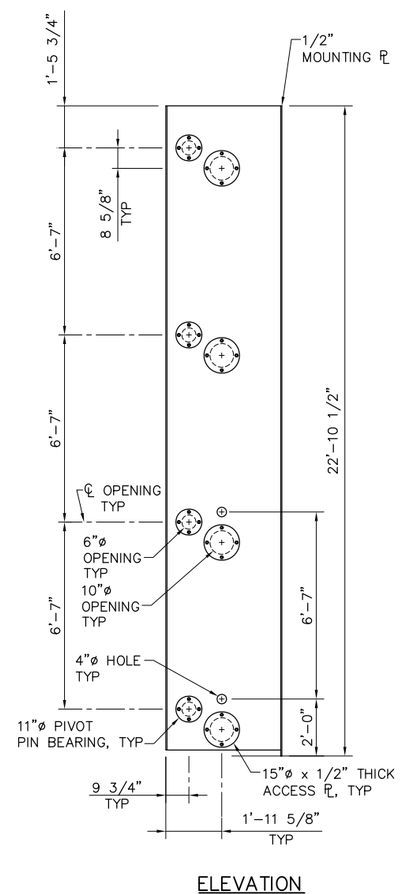

2 LOCK ENCLOSURE DETAIL
SCALE: 3/8" = 1'-0"

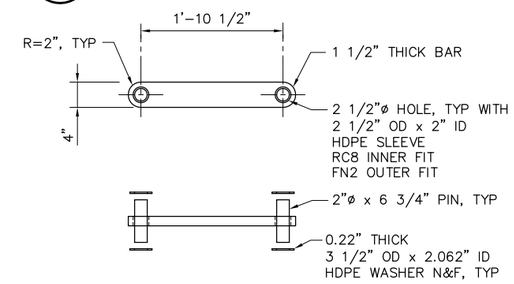

6 LOCKING LINK DETAIL
SCALE: 1" = 1'-0"

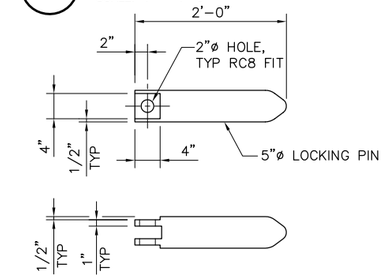

7 LOCKING PIN DETAIL
SCALE: 1" = 1'-0"

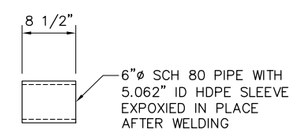

8 PIN GUIDE DETAIL
SCALE: 1" = 1'-0"

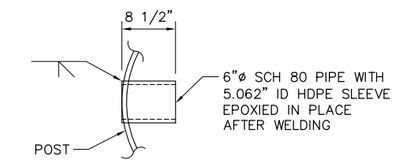

9 PIN SOCKET DETAIL
SCALE: 1" = 1'-0"

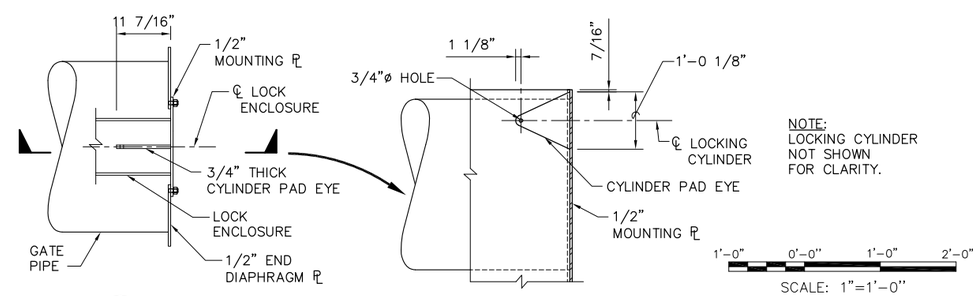

NOTE:
LOCKING CYLINDER
NOT SHOWN
FOR CLARITY.

10 CYLINDER PAD EYE DETAIL
SCALE: 3/4" = 1'-0"

100% SUBMITTAL
REVISION 1

IF SHEET IS LESS THAN 22" x 34"
IT IS A REDUCED PRINT –
SCALE REDUCED ACCORDINGLY.

REVISION	DESCRIPTION	BY	DATE

San Luis & Delta-Mendota Water Authority
842 6th Street, Suite 7
PO Box 2157
Los Banos, California 93635

Moffatt & Nichol
2001 N. Main Street, Suite 360
Walnut Creek, California 94596
(925) 944-5411

DSGN	DR	CHK
CBS	AB/EP	TDB
JOB NO. 6097-03	SUBMITTED BY RMR	

2-GATES FISH PROTECTION
DEMONSTRATION PROJECT

OLD RIVER
GATE MECHANICAL DETAILS
SHEET 2

DATE 10/02/09
SHEET 30 OF 78

C24

P:\6097-03 SWC GATE DESIGN\CADD\DWG\609703-C24.DWG 10/1/2009 9:03 AM

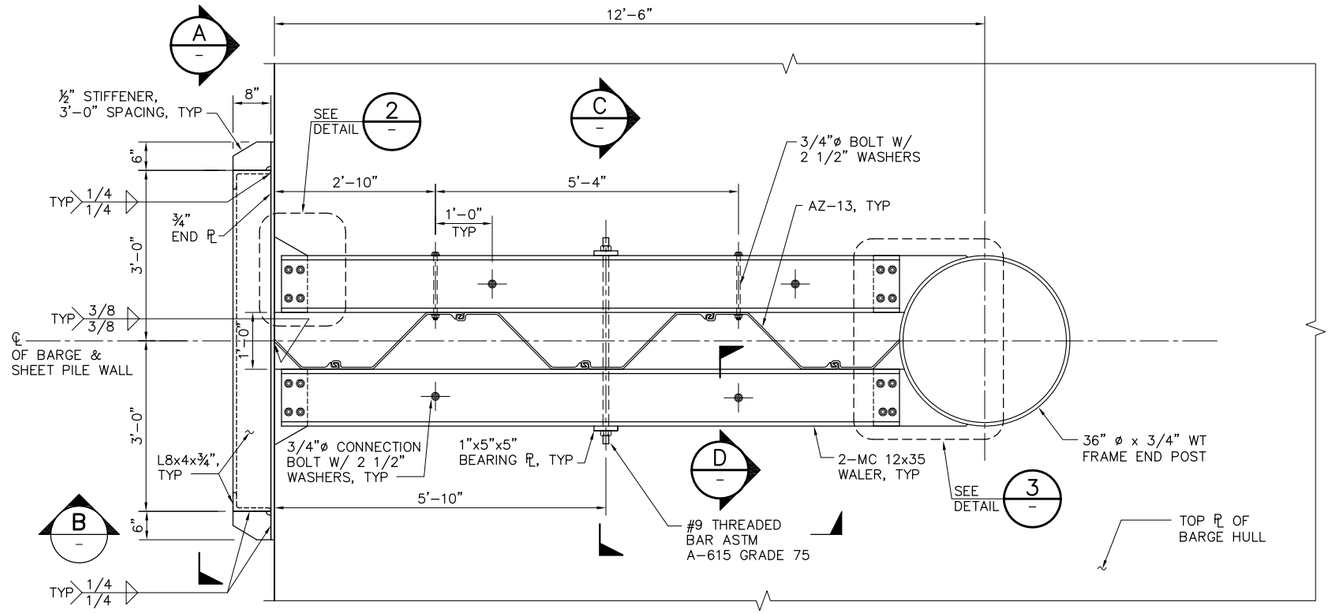

PLAN

1 / C17 DETAIL
SCALE: 3/4" = 1'-0"

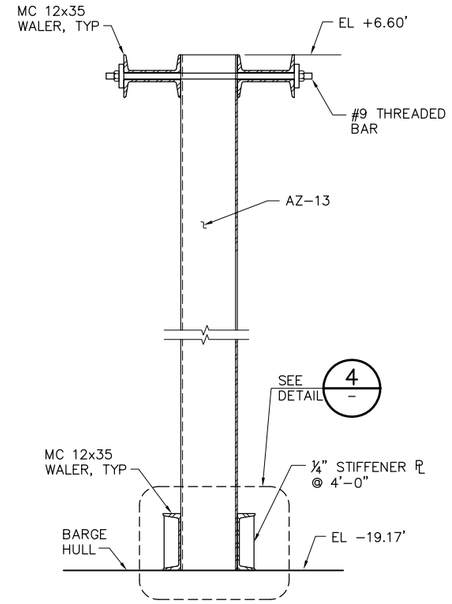

C / – SECTION
SCALE: 3/4"=1'-0"

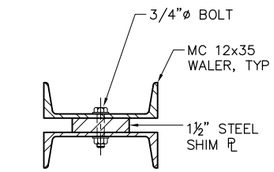

D / – SECTION
SCALE: 1 1/2"=1'-0"

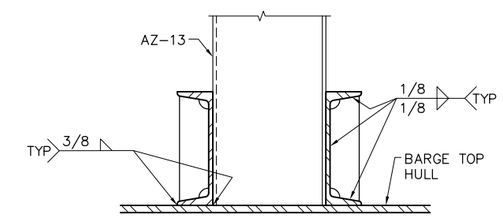

4 / – DETAIL
SCALE: 1 1/2"=1'-0"

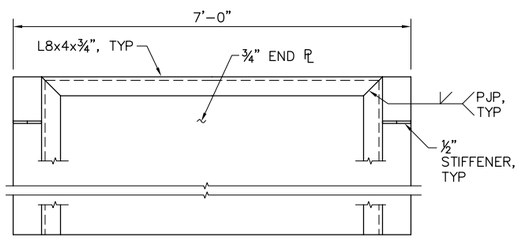

A / – SECTION
SCALE: 3/4" = 1'-0"

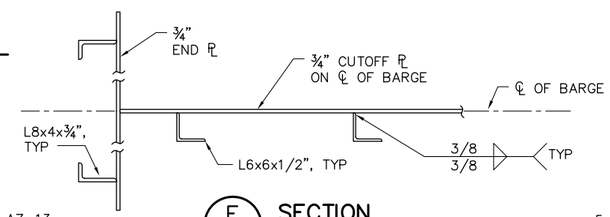

F / – SECTION
SCALE: 3/4" = 1'-0"

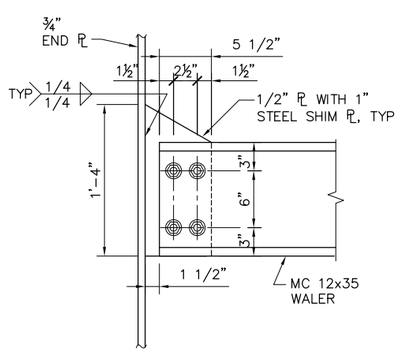

2 / – DETAIL
SCALE: 1 1/2"=1'-0"

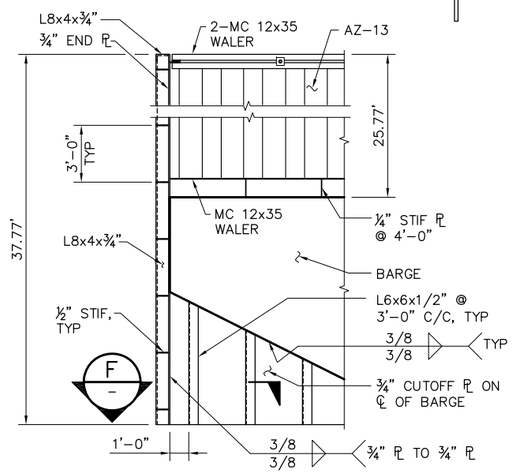

B / – SECTION
SCALE: 1/4" = 1'-0"

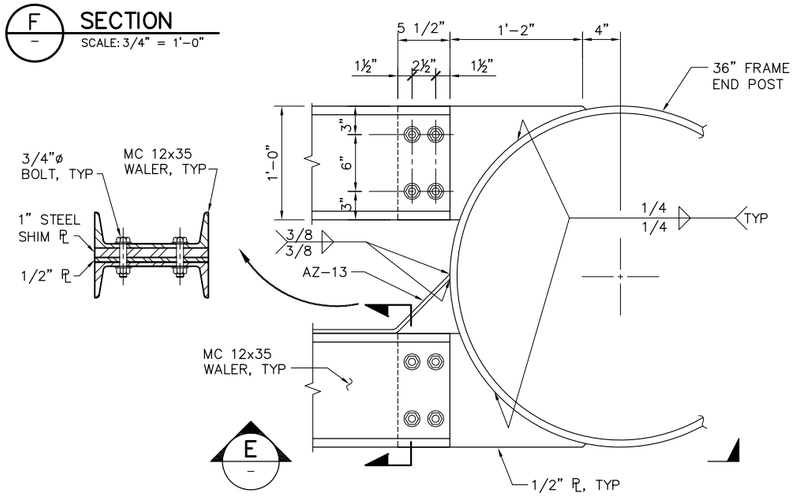

3 / – DETAIL
SCALE: 1 1/2"=1'-0"

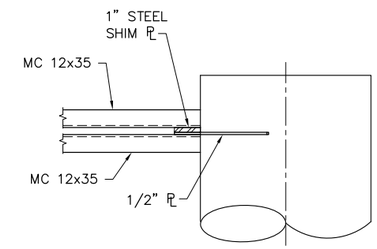

E / – SECTION
SCALE: 3/4"=1'-0"

1'-0" 0'-0" 6" 1'-0"
SCALE: 1 1/2"=1'-0"

2'-0" 0'-0" 1'-0" 2'-0"
SCALE: 3/4"=1'-0"

NOTE:

ALL BOLTS ARE ASTM A-307 U.O.N.

100% SUBMITTAL REVISION 1

IF SHEET IS LESS THAN 22" x 34" IT IS A REDUCED PRINT – SCALE REDUCED ACCORDINGLY.

REVISION	DESCRIPTION	BY	DATE

San Luis & Delta-Mendota Water Authority
842 6th Street, Suite 7
PO Box 2157
Los Banos, California 93635

Moffatt & Nichol
2001 N. Main Street, Suite 360
Walnut Creek, California 94596
(925) 944-5411

DSGN	DR	CHK
JMB	AB	TDB
JOB NO. 6097-03	SUBMITTED BY RMR	

2-GATES FISH PROTECTION DEMONSTRATION PROJECT

OLD RIVER END WALL SCANTLINGS

DATE 10/02/09

SHEET 31 OF 78

C25

P:\6097-03 SWC GATE DESIGN\CADD\DWG\609703-C25.DWG 9/1/2009 9:38 AM

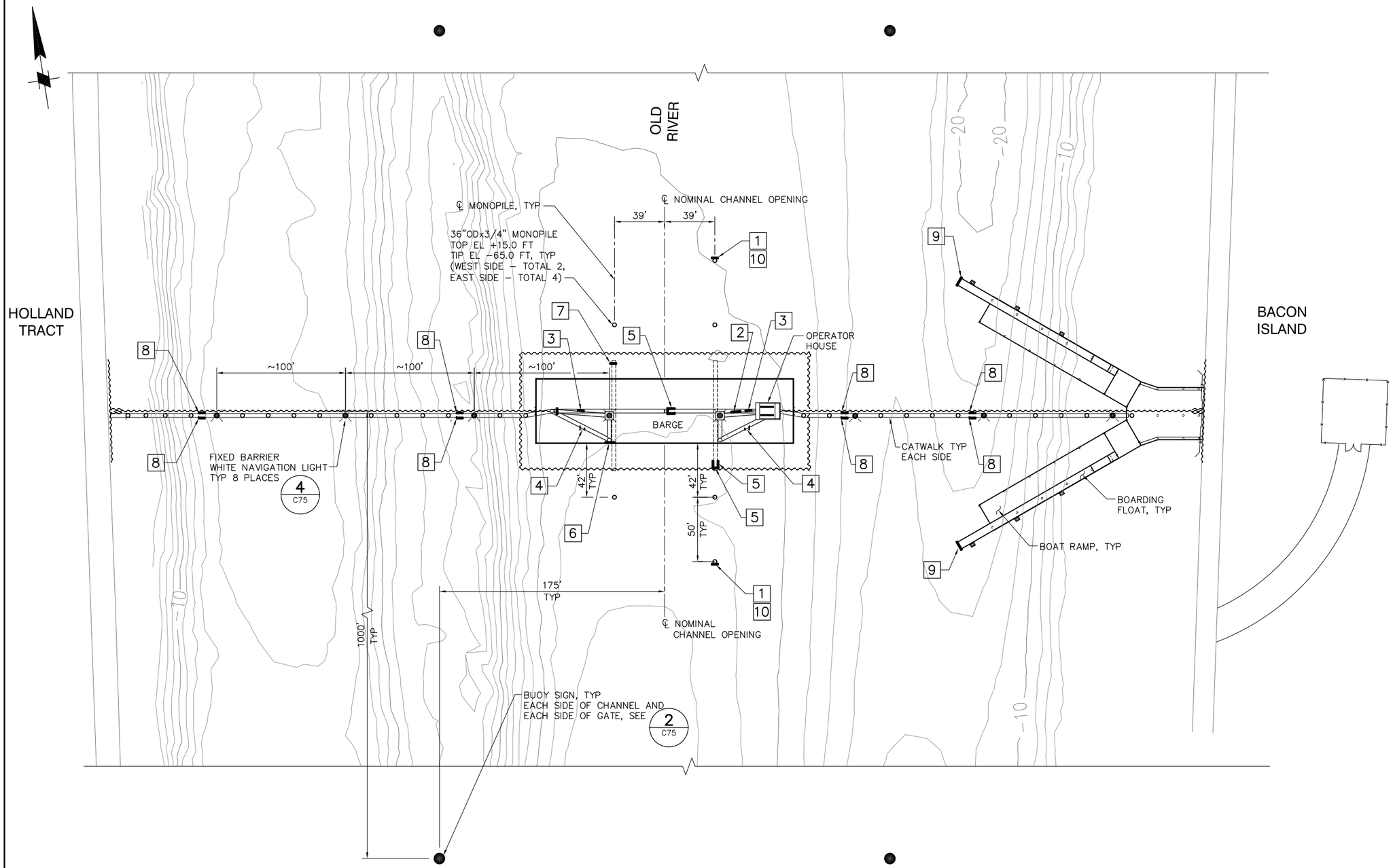

SIGN DATA

LOCATION	SIGN	SIGN DETAIL	SIGN MOUNTING DETAIL
1	GATE 5 MPH	1 / C75	1 / C76
2	GATE WARNING SIGN	5 / C75	5 / C76
3	DANGER SIGN	7 / C75	5 / C76
4	DANGER SIGN	7 / C75	3 / C76
5	GATE POSITION SIGNS "GATES OPEN" "GATES CLOSED"	6 / C75	2 / C74
6	GATE WARNING SIGN	5 / C75	2 / C76
7	GATE POSITION SIGN "GATES OPEN"	6 / C75	4 / C76
8	STAY BACK WARNING SIGN	9 / C75	5 / C76
9	BOAT RAMP DOCK SIGN	3 / C75	6 / C76
10	GATE OPENING SIGN	10 / C75	1 / C76

PLAN

SCALE: 1"= 40'

40' 0' 40' 80'

SCALE: 1"=40'

100% SUBMITTAL REVISION 1

IF SHEET IS LESS THAN 22" x 34" IT IS A REDUCED PRINT – SCALE REDUCED ACCORDINGLY.

REVISION	DESCRIPTION	BY	DATE

San Luis & Delta-Mendota Water Authority
842 6th Street, Suite 7
PO Box 2157
Los Banos, California 93635

Moffatt & Nichol
2001 N. Main Street, Suite 360
Walnut Creek, California 94596
(925) 944-5411

DSGN	DR	CHK
RBD	AB	TDB
JOB NO. 6097-03	SUBMITTED BY RMR	

2-GATES FISH PROTECTION DEMONSTRATION PROJECT

OLD RIVER
AIDS TO NAVIGATION PLAN

DATE 10/02/09

SHEET 32 OF 78

C26

P:\6097-03 SWC GATE DESIGN\CADD\DWG\609703-C26.DWG 9/30/2009 4:31 PM

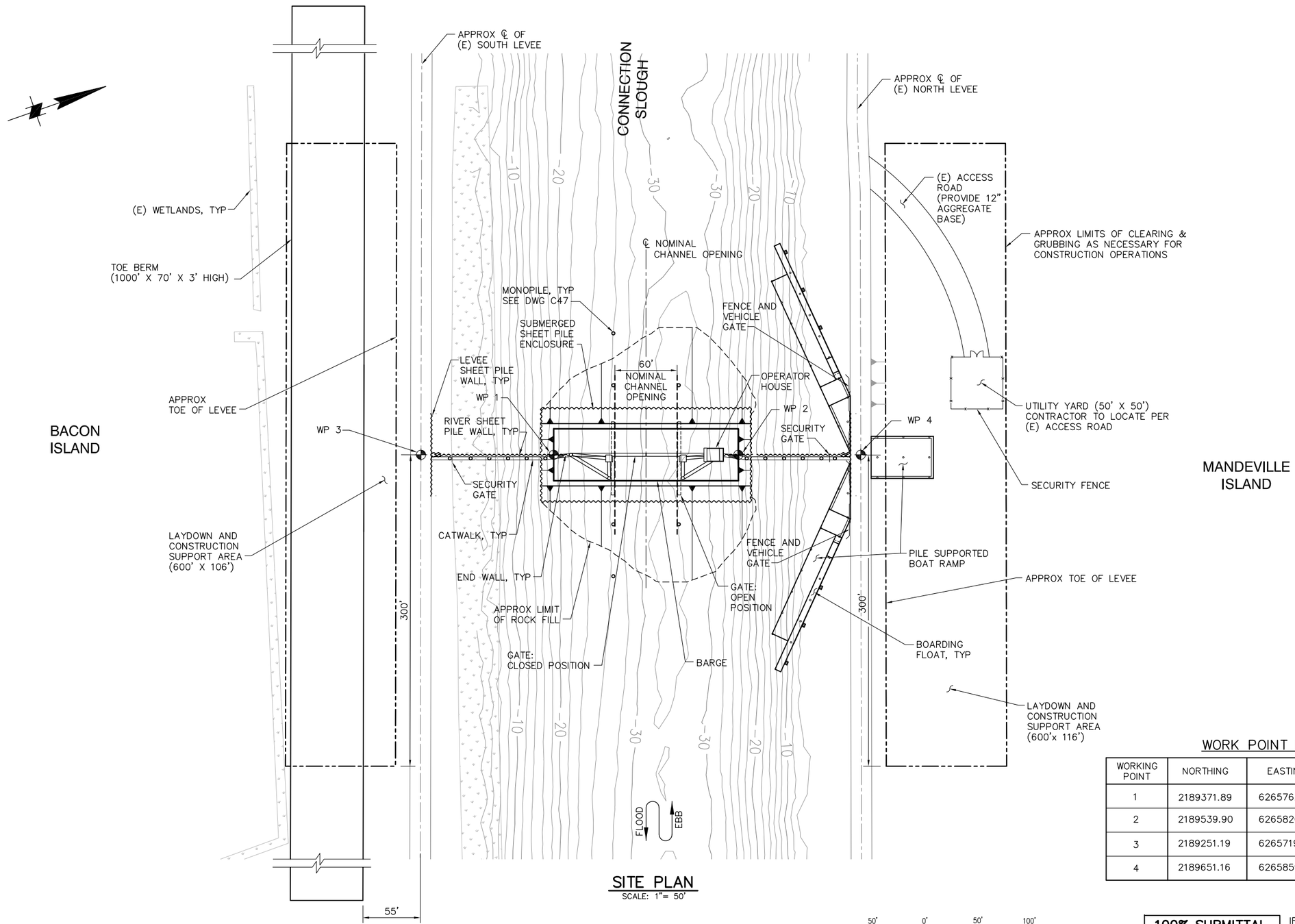

SITE PLAN

SCALE: 1"= 50'

50' 0' 50' 100'

SCALE: 1"=50'

WORK POINT DATA

WORKING POINT	NORTHING	EASTING	FEATURE
1	2189371.89	6265762.17	℄ OF SOUTH SIDE OF BARGE
2	2189539.90	6265820.98	℄ OF NORTH SIDE OF BARGE
3	2189251.19	6265719.91	℄ OF SOUTH LEVEE AND GATE
4	2189651.16	6265859,94	℄ OF NORTH LEVEE AND GATE

100% SUBMITTAL REVISION 1

IF SHEET IS LESS THAN 22" x 34" IT IS A REDUCED PRINT – SCALE REDUCED ACCORDINGLY.

REVISION	DESCRIPTION	BY	DATE

San Luis & Delta-Mendota Water Authority
842 6th Street, Suite 7
PO Box 2157
Los Banos, California 93635

Moffatt & Nichol
2001 N. Main Street, Suite 360
Walnut Creek, California 94596
(925) 944-5411

DSGN	DR	CHK
TDB	EP/AB	GTH
JOB NO. 6097-03	SUBMITTED BY RMR	

2-GATES FISH PROTECTION DEMONSTRATION PROJECT

CONNECTION SLOUGH SITE PLAN

DATE 10/02/09

SHEET 33 OF 78

C31

P:\6097-03 SWC GATE DESIGN\CADD\DWG\609703-C31.DWG 9/30/2009 1:32 PM

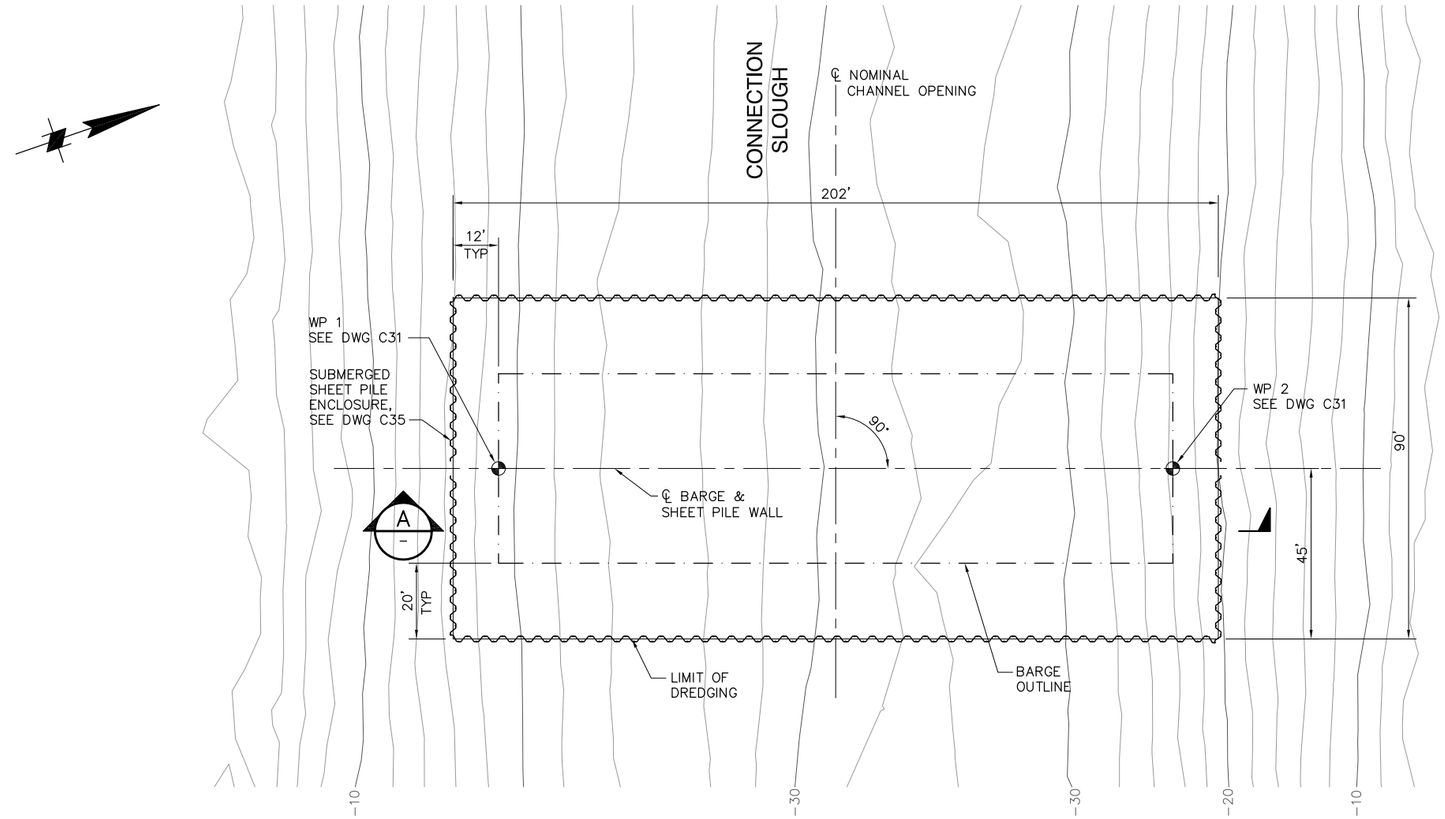

PLAN

SCALE: 1"= 20'

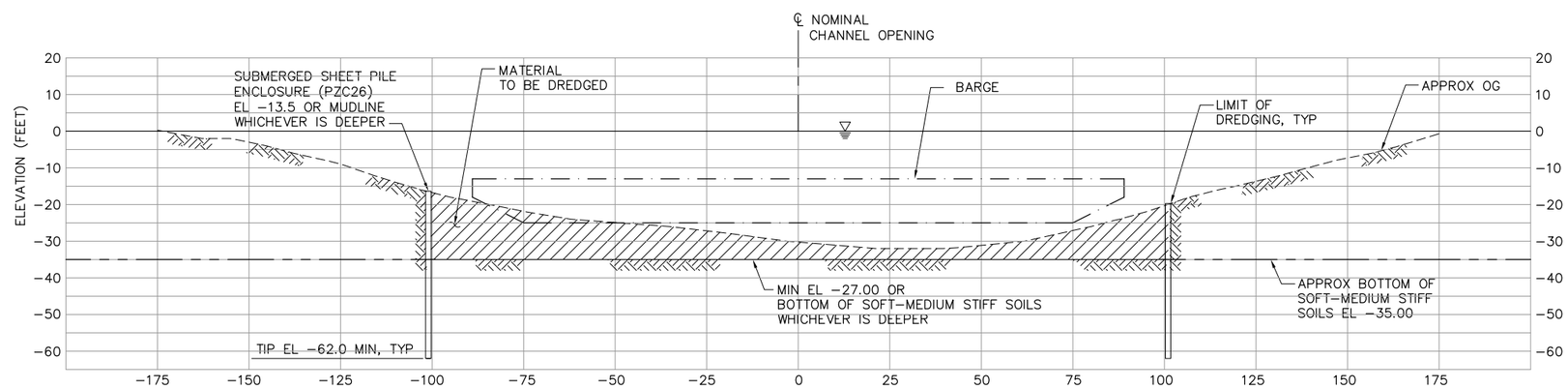

A SECTION

SCALE: 1"=20'

20' 0' 20' 40'

SCALE: 1"=20'

NOTE:

GATE AND ALL OTHER FEATURES NOT SHOWN FOR CLARITY.

100% SUBMITTAL REVISION 1

IF SHEET IS LESS THAN 22" x 34" IT IS A REDUCED PRINT – SCALE REDUCED ACCORDINGLY.

REVISION	DESCRIPTION	BY	DATE

San Luis & Delta-Mendota Water Authority
842 6th Street, Suite 7
PO Box 2157
Los Banos, California 93635

Moffatt & Nichol
2001 N. Main Street, Suite 360
Walnut Creek, California 94596
(925) 944-5411

DSGN	DR	CHK
TDB	EP/AB	GTH
JOB NO. 6097-03	SUBMITTED BY RMR	

2-GATES FISH PROTECTION DEMONSTRATION PROJECT

CONNECTION SLOUGH DREDGING PLAN AND SECTION

DATE 10/02/09

SHEET 34 OF 78

C32

P:\6097-03 SWC GATE DESIGN\CADD\DWG\609703-C32.DWG 10/1/2009 2:14 PM

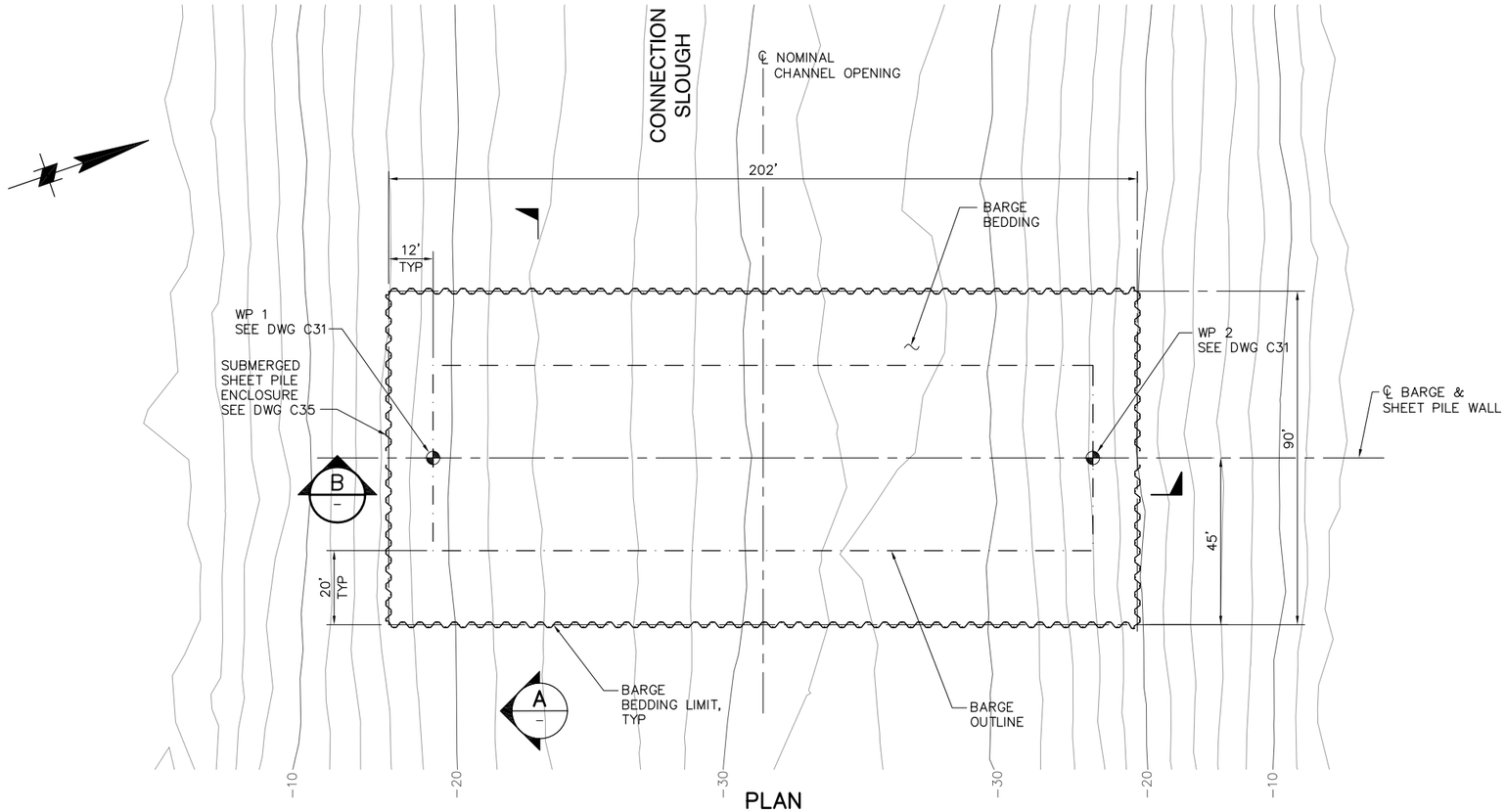

PLAN
SCALE: 1"= 20'

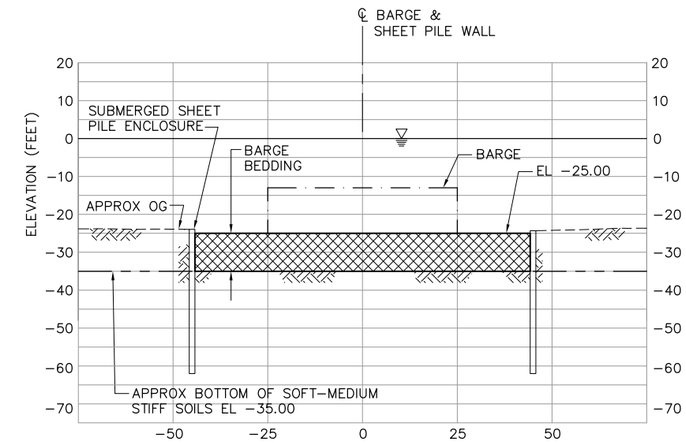

A SECTION
SCALE: 1"=20'

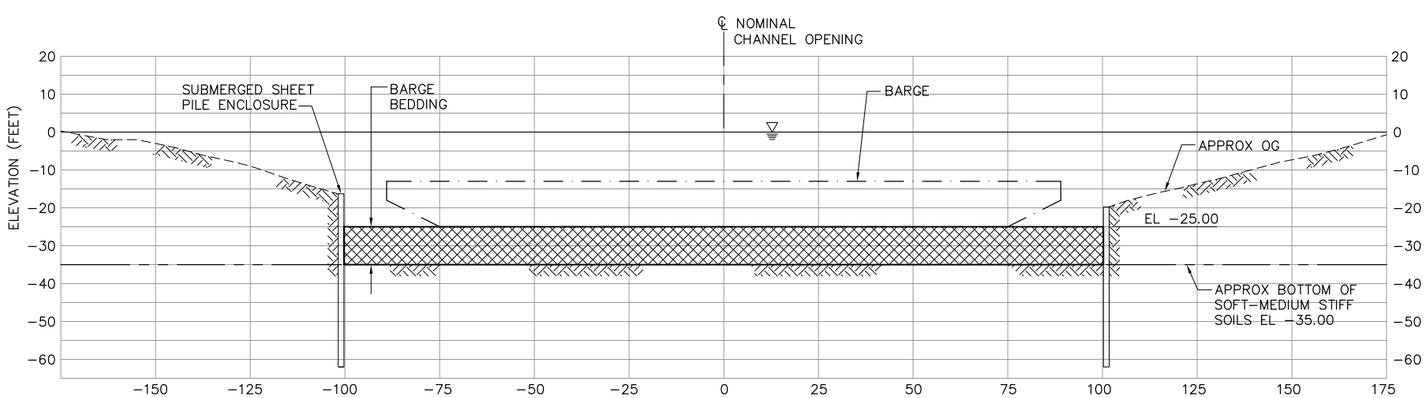

B SECTION
SCALE: 1"=20'

NOTE:
GATE AND ALL OTHER FEATURES NOT SHOWN FOR CLARITY.

20' 0' 20' 40'
SCALE: 1"=20'

100% SUBMITTAL
REVISION 1

IF SHEET IS LESS THAN 22" x 34" IT IS A REDUCED PRINT – SCALE REDUCED ACCORDINGLY.

REVISION	DESCRIPTION	BY	DATE

San Luis & Delta-Mendota Water Authority
842 6th Street, Suite 7
PO Box 2157
Los Banos, California 93635

Moffatt & Nichol
2001 N. Main Street, Suite 360
Walnut Creek, California 94596
(925) 944-5411

DSGN	DR	CHK
TDB	EP/AB	GTH
JOB NO. 6097-03	SUBMITTED BY RMR	

2-GATES FISH PROTECTION DEMONSTRATION PROJECT

CONNECTION SLOUGH, BARGE BEDDING PLAN

DATE 10/02/09

SHEET 35 OF 78

C33

P:\6097-03 SWC GATE DESIGN\CADD\DWG\609703-C33.DWG 10/1/2009 10:26 AM

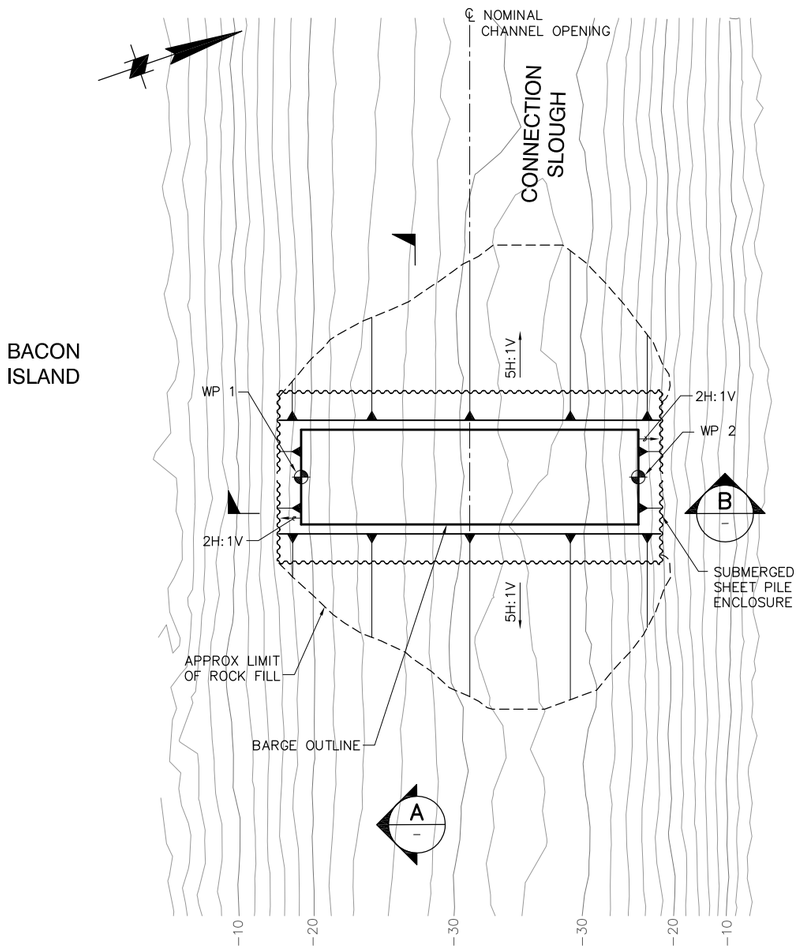

PLAN
SCALE: 1"= 40'

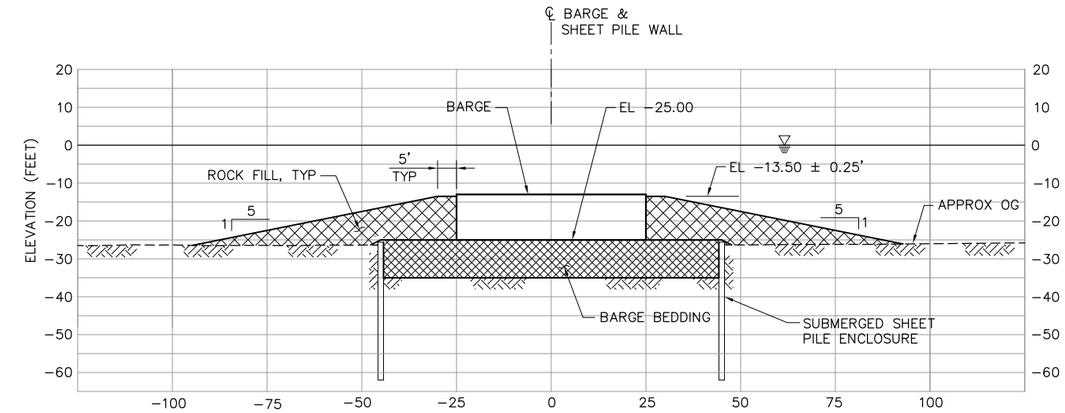

A SECTION
SCALE: 1"=20'

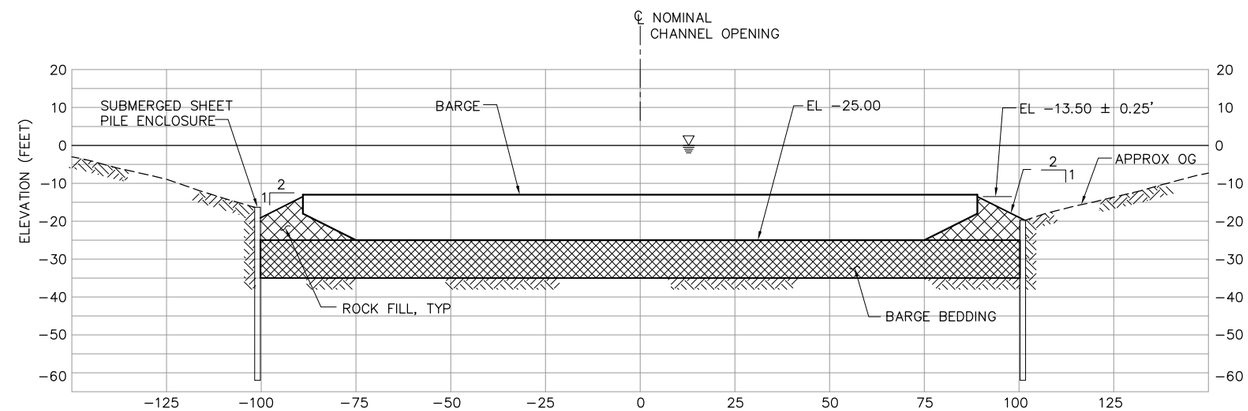

B SECTION
SCALE: 1"=20'

NOTES:

1. KING PILES AND SHEET PILES NEAR BARGE SHALL BE PLACED BEFORE ROCK FILL.
2. GATE AND ALL OTHER FEATURES NOT SHOWN FOR CLARITY.

40' 0' 40' 80'
SCALE: 1"=40'

100% SUBMITTAL REVISION 1

IF SHEET IS LESS THAN 22" x 34" IT IS A REDUCED PRINT – SCALE REDUCED ACCORDINGLY.

REVISION	DESCRIPTION	BY	DATE

San Luis & Delta-Mendota Water Authority
842 6th Street, Suite 7
PO Box 2157
Los Banos, California 93635

Moffatt & Nichol
2001 N. Main Street, Suite 360
Walnut Creek, California 94596
(925) 944-5411

DSGN	DR	CHK
JMB	EP/AB	TDB
JOB NO. 6097-03	SUBMITTED BY RMR	

2-GATES FISH PROTECTION DEMONSTRATION PROJECT

CONNECTION SLOUGH BARGE - ROCK FILL PLAN AND SECTIONS

DATE 10/02/09

SHEET 36 OF 78

C34

P:\6097-03 SWC GATE DESIGN\CADD\DWG\609703-C34.DWG 9/30/2009 11:53 AM

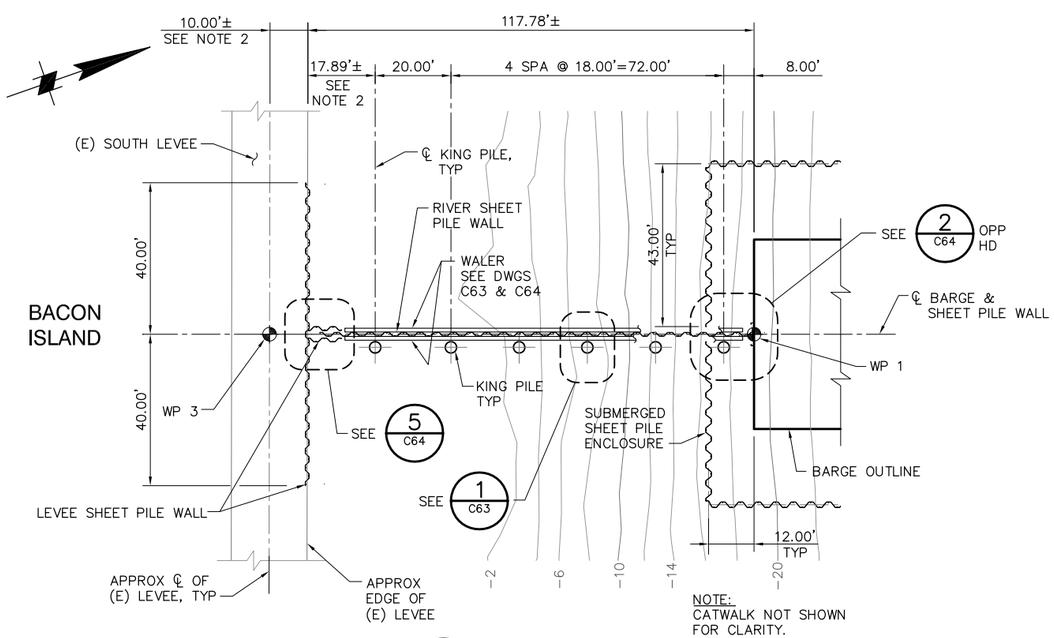

NOTE:
CATWALK NOT SHOWN FOR CLARITY.

1 PLAN
SCALE: 1"=20'

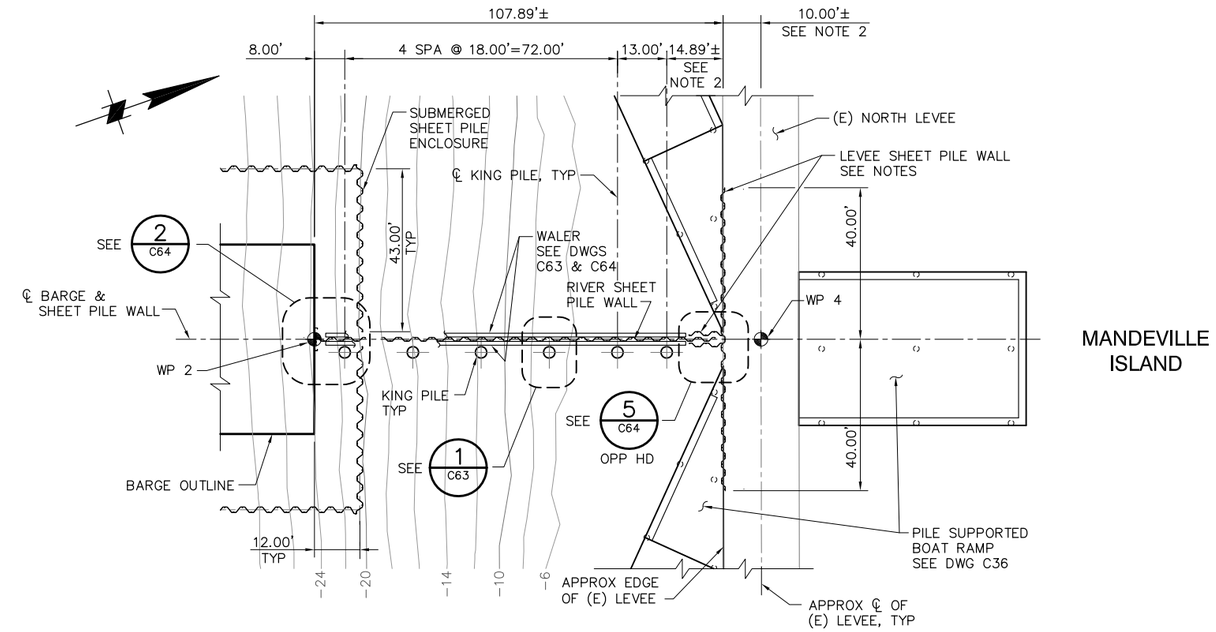

NOTE:
CATWALK NOT SHOWN FOR CLARITY.

2 PLAN
SCALE: 1"=20'

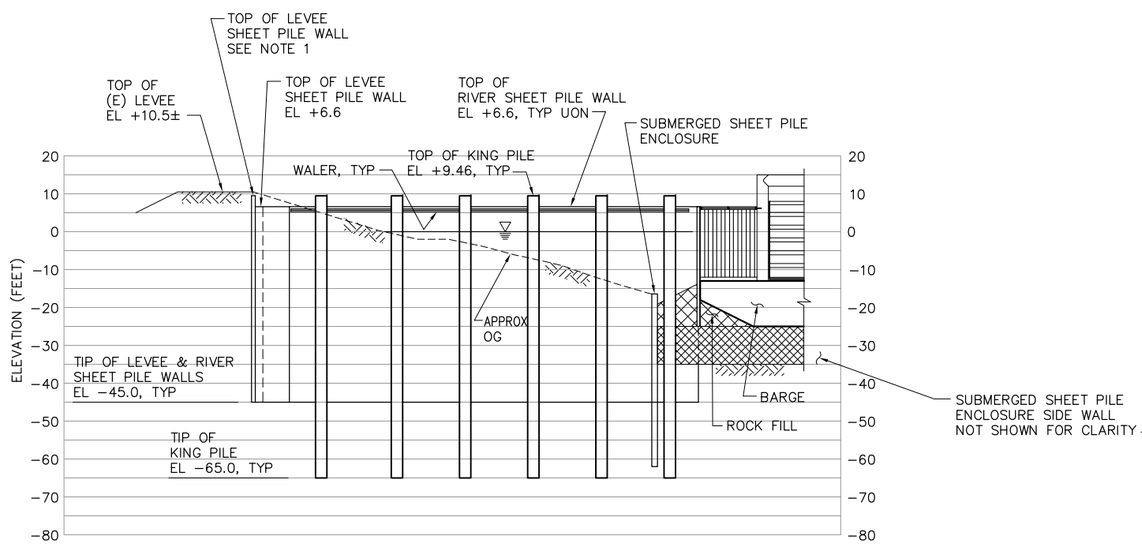

ELEVATION
SCALE: 1"= 20'

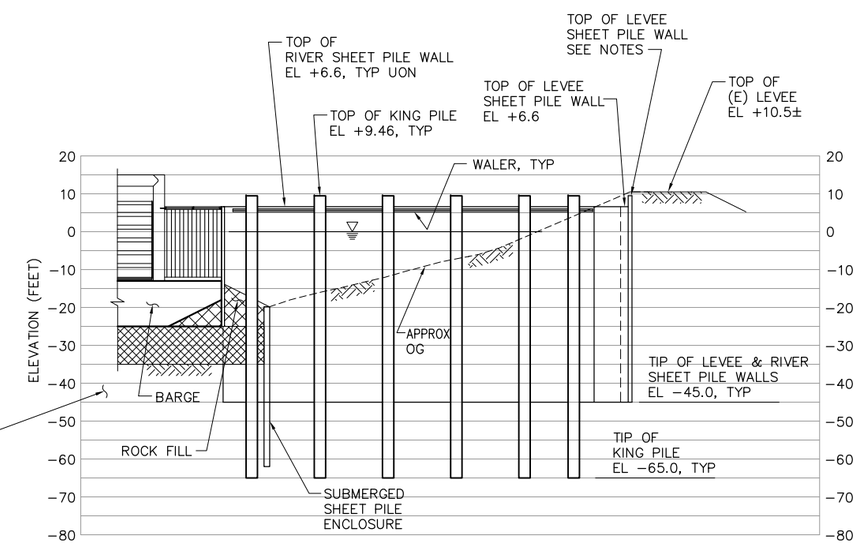

ELEVATION
SCALE: 1"= 20'

NOTES:

1. TOP OF LEVEE SHEET PILE WALL SHALL BE 6" BELOW TOP OF (E) LEVEE UON.
2. LEVEE SHEET PILE WALL TO BE LOCATED 1 FT MIN OFF THE EDGE OF (E) ROAD SURFACE.

NOTE:
BOAT RAMP NOT SHOWN FOR CLARITY.

20' 0' 20' 40'
SCALE: 1"=20'

100% SUBMITTAL REVISION 1

IF SHEET IS LESS THAN 22" x 34" IT IS A REDUCED PRINT – SCALE REDUCED ACCORDINGLY.

REVISION	DESCRIPTION	BY	DATE

San Luis & Delta-Mendota Water Authority
842 6th Street, Suite 7
PO Box 2157
Los Banos, California 93635

Moffatt & Nichol
2001 N. Main Street, Suite 360
Walnut Creek, California 94596
(925) 944-5411

DSGN	DR	CHK
JMB	EP/AB	TDB
JOB NO. 6097-03	SUBMITTED BY RMR	

2-GATES FISH PROTECTION DEMONSTRATION PROJECT

CONNECTION SLOUGH
SHEET PILE WALL ARRANGEMENT
PLAN AND ELEVATION

DATE 10/02/09

SHEET 37 OF 78

C35

P:\6097-03 SWC GATE DESIGN\CADD\DWG\609703-C35.DWG 9/30/2009 4:14 PM

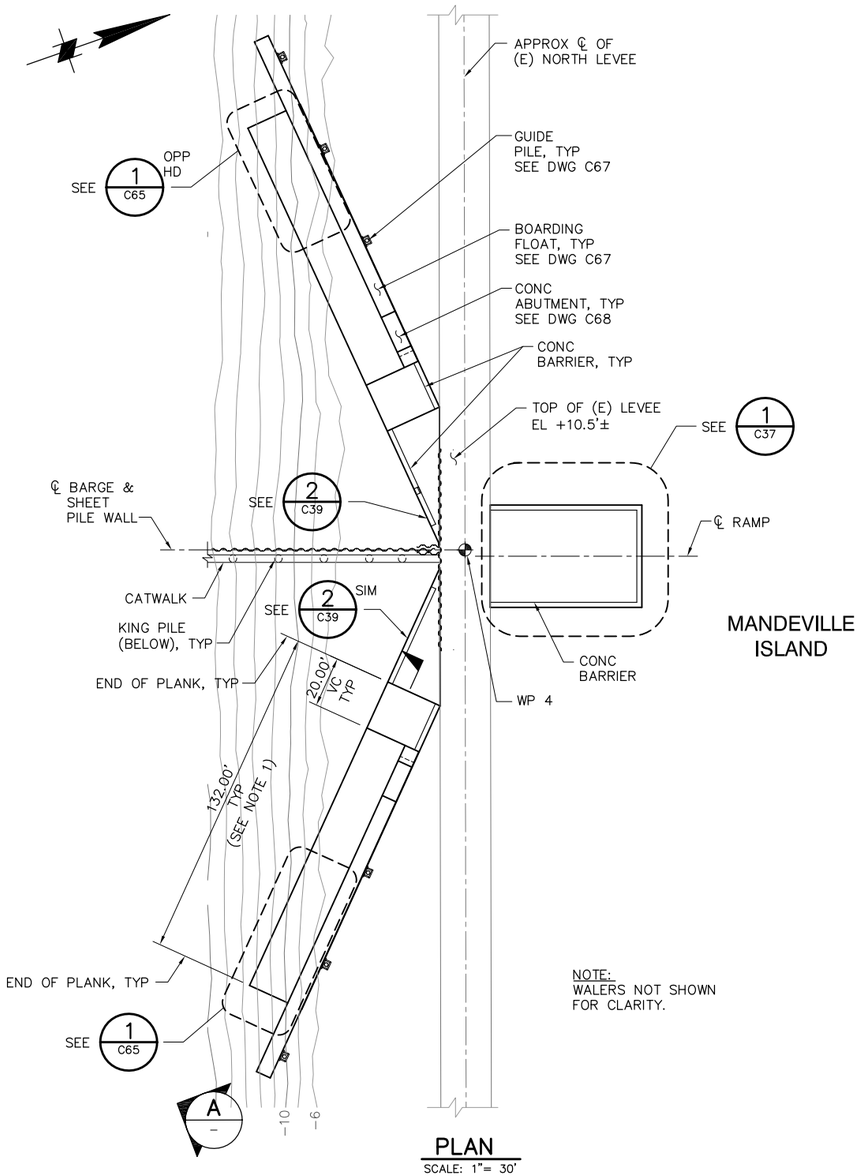

PLAN

SCALE: 1"= 30'

NOTE:
WALERS NOT SHOWN
FOR CLARITY.

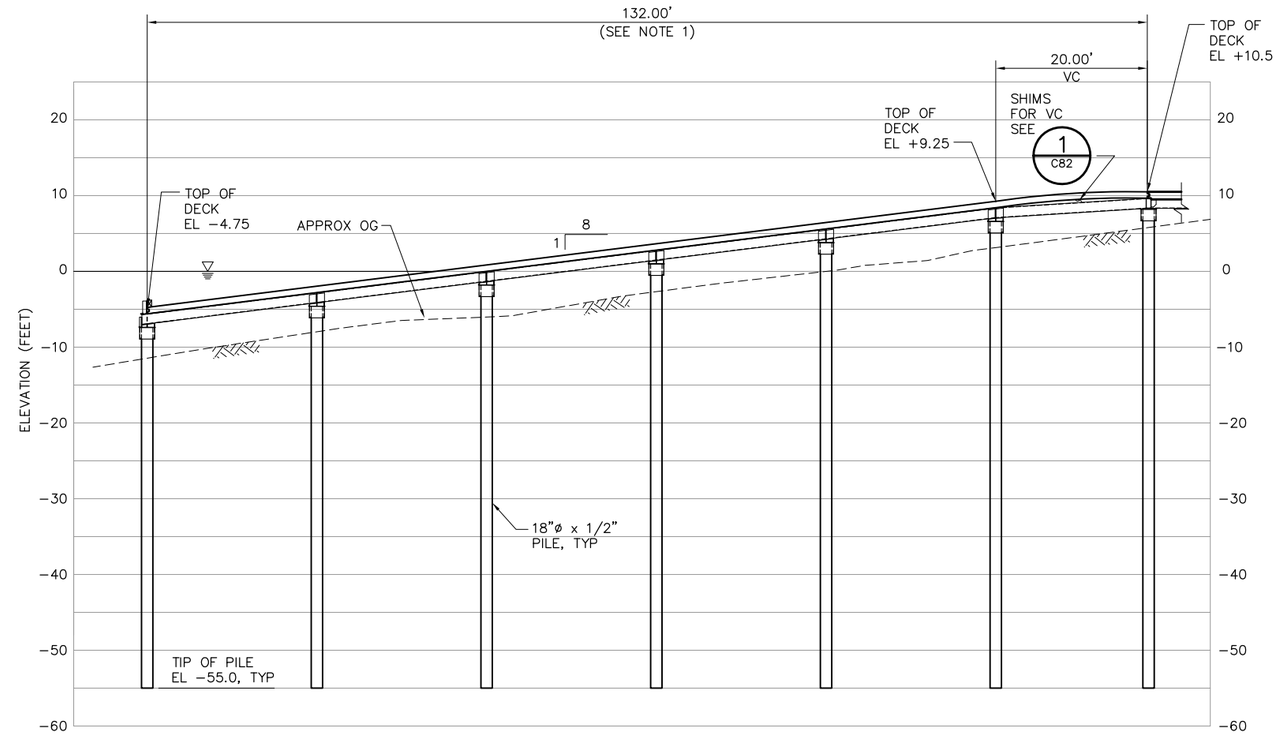

A – SECTION

SCALE: 1"=10'

NOTES:

1. TRUE LENGTH OF RAMP ACCOUNTS FOR AN AVERAGE GAP OF 3/8" PER PLANK JOINT.

10' 0' 10' 20'
SCALE: 1"=10'

30' 0' 30' 60'
SCALE: 1"=30'

100% SUBMITTAL REVISION 1

IF SHEET IS LESS THAN 22" x 34" IT IS A REDUCED PRINT – SCALE REDUCED ACCORDINGLY.

REVISION	DESCRIPTION	BY	DATE

San Luis & Delta–Mendota Water Authority
842 6th Street, Suite 7
PO Box 2157
Los Banos, California 93635

Moffatt & Nichol
2001 N. Main Street, Suite 360
Walnut Creek, California 94596
(925) 944–5411

DSGN	DR	CHK
JMB	EP/AB	TDB
JOB NO. 6097–03	SUBMITTED BY RMR	

2–GATES FISH PROTECTION DEMONSTRATION PROJECT

CONNECTION SLOUGH
BOAT RAMP PLAN AND SECTION

DATE 10/02/09

SHEET 38 OF 78

C36

P:\6097–03 SWC GATE DESIGN\CADD\DWG\609703–C36.DWG 9/30/2009 10:31 AM

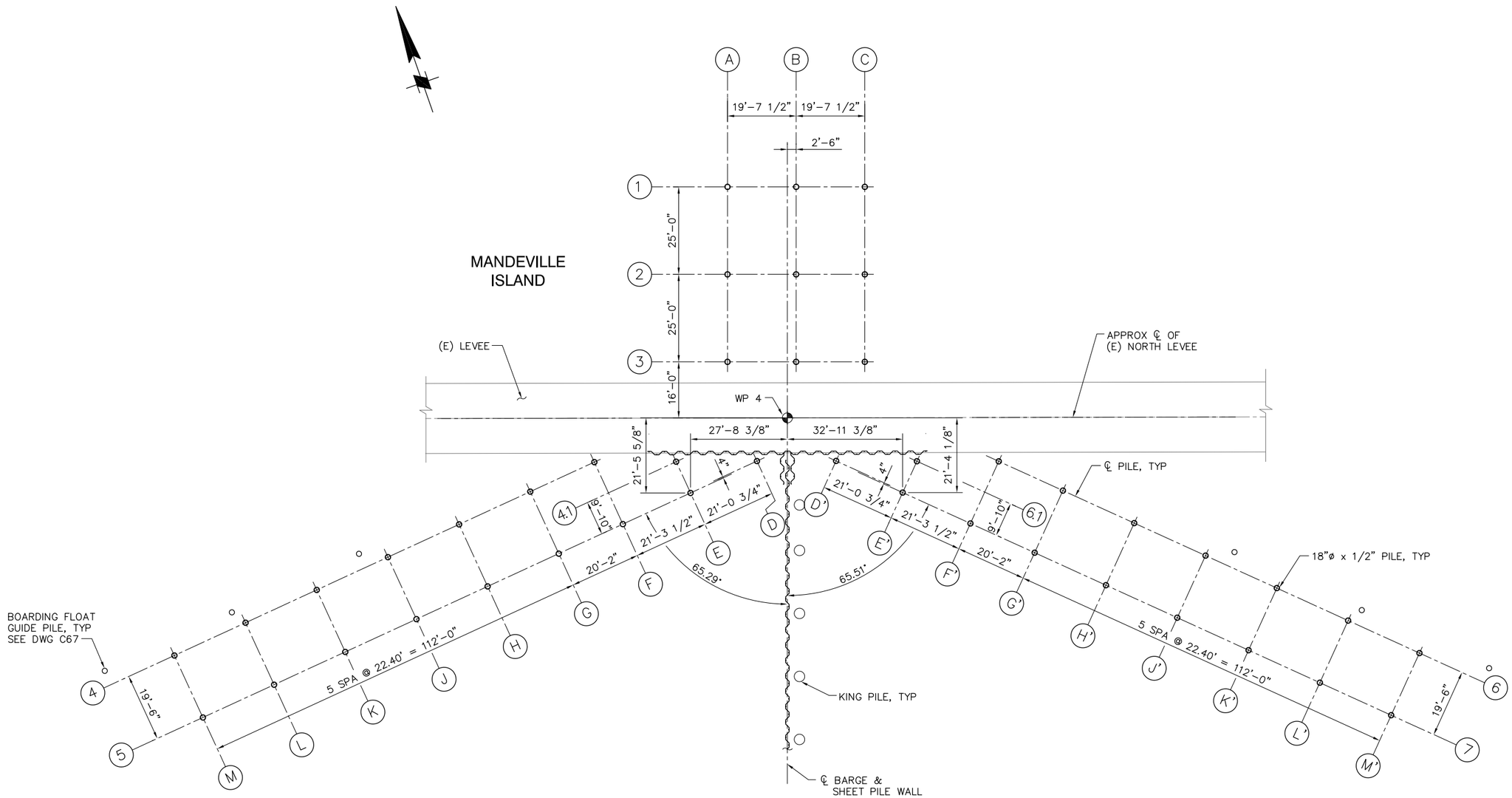

PILE PLAN

SCALE: 1/16" = 1'-0"

16'-0" 0'-0" 16'-0" 32'-0"

SCALE: 1/16"=1'-0"

100% SUBMITTAL REVISION 1

IF SHEET IS LESS THAN 22" x 34" IT IS A REDUCED PRINT – SCALE REDUCED ACCORDINGLY.

REVISION	DESCRIPTION	BY	DATE

San Luis & Delta-Mendota Water Authority
842 6th Street, Suite 7
PO Box 2157
Los Banos, California 93635

Moffatt & Nichol
2001 N. Main Street, Suite 360
Walnut Creek, California 94596
(925) 944-5411

DSGN	DR	CHK
JMB	EP/AB	TDB
JOB NO. 6097-03	SUBMITTED BY RMR	

2-GATES FISH PROTECTION DEMONSTRATION PROJECT

CONNECTION SLOUGH BOAT RAMP PILE PLAN

DATE 10/02/09

SHEET 39 OF 78

C36.1

P:\6097-03 SWC GATE DESIGN\CADD\DWG\609703-C36.1.DWG 9/1/2009 9:51 AM

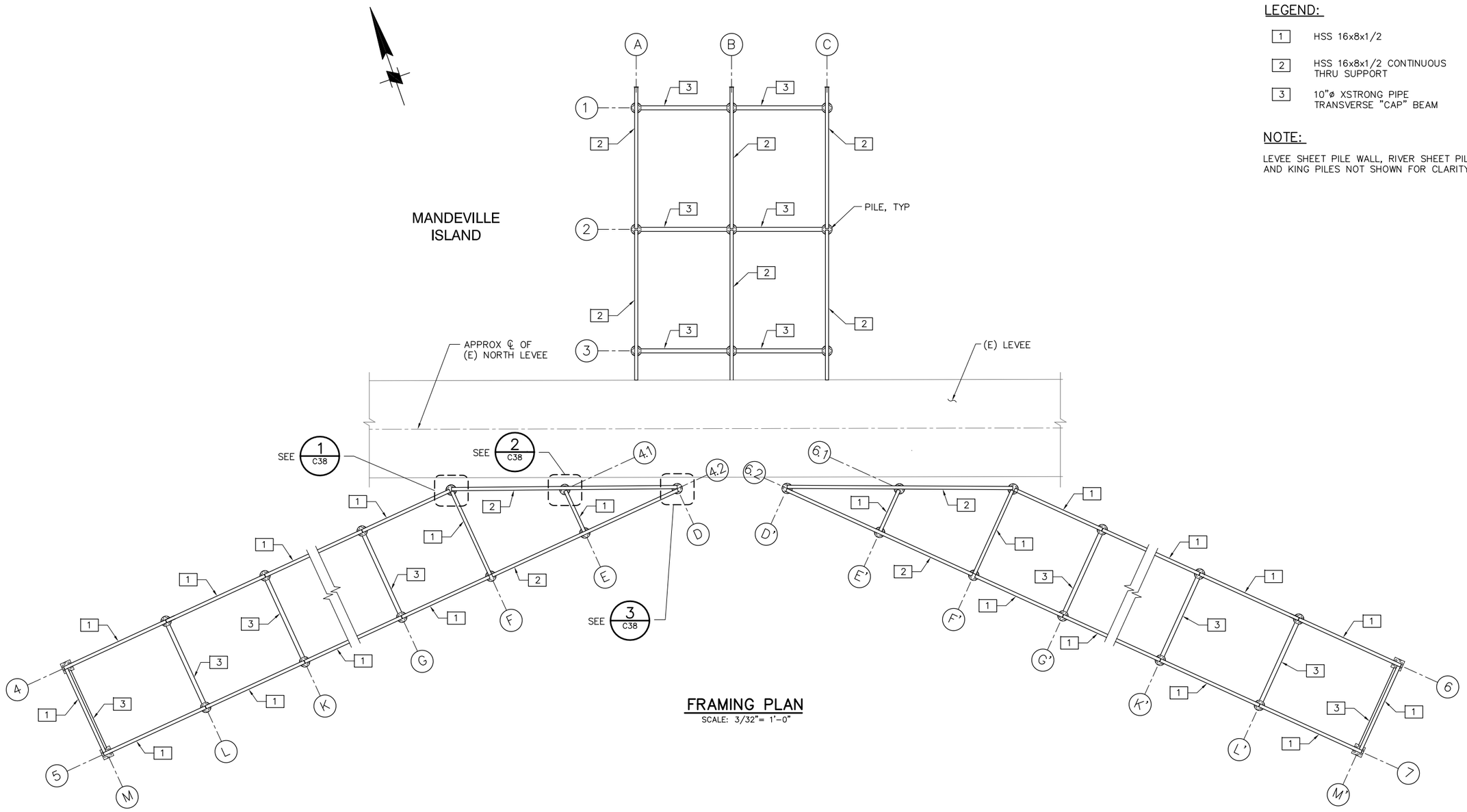

FRAMING PLAN

SCALE: 3/32"= 1'-0"

LEGEND:

1	HSS 16x8x1/2
2	HSS 16x8x1/2 CONTINUOUS THRU SUPPORT
3	10"ø XSTRONG PIPE TRANSVERSE "CAP" BEAM

NOTE:

LEVEE SHEET PILE WALL, RIVER SHEET PILE WALL AND KING PILES NOT SHOWN FOR CLARITY.

16'-0" 0'-0" 8'-0" 16'-0"

SCALE: 3/32"=1'-0"

100% SUBMITTAL REVISION 1

IF SHEET IS LESS THAN 22" x 34" IT IS A REDUCED PRINT – SCALE REDUCED ACCORDINGLY.

REVISION	DESCRIPTION	BY	DATE

San Luis & Delta-Mendota Water Authority
842 6th Street, Suite 7
PO Box 2157
Los Banos, California 93635

Moffatt & Nichol
2001 N. Main Street, Suite 360
Walnut Creek, California 94596
(925) 944-5411

DSGN	DR	CHK
JMB	EP/AB	TDB
JOB NO. 6097-03	SUBMITTED BY RMR	

2-GATES FISH PROTECTION DEMONSTRATION PROJECT

CONNECTION SLOUGH BOAT RAMP FRAMING PLAN

DATE 10/02/09

SHEET 40 OF 78

C36.2

P:\6097-03 SWC GATE DESIGN\CADD\DWG\609703-C36.2.DWG 10/1/2009 2:07 PM

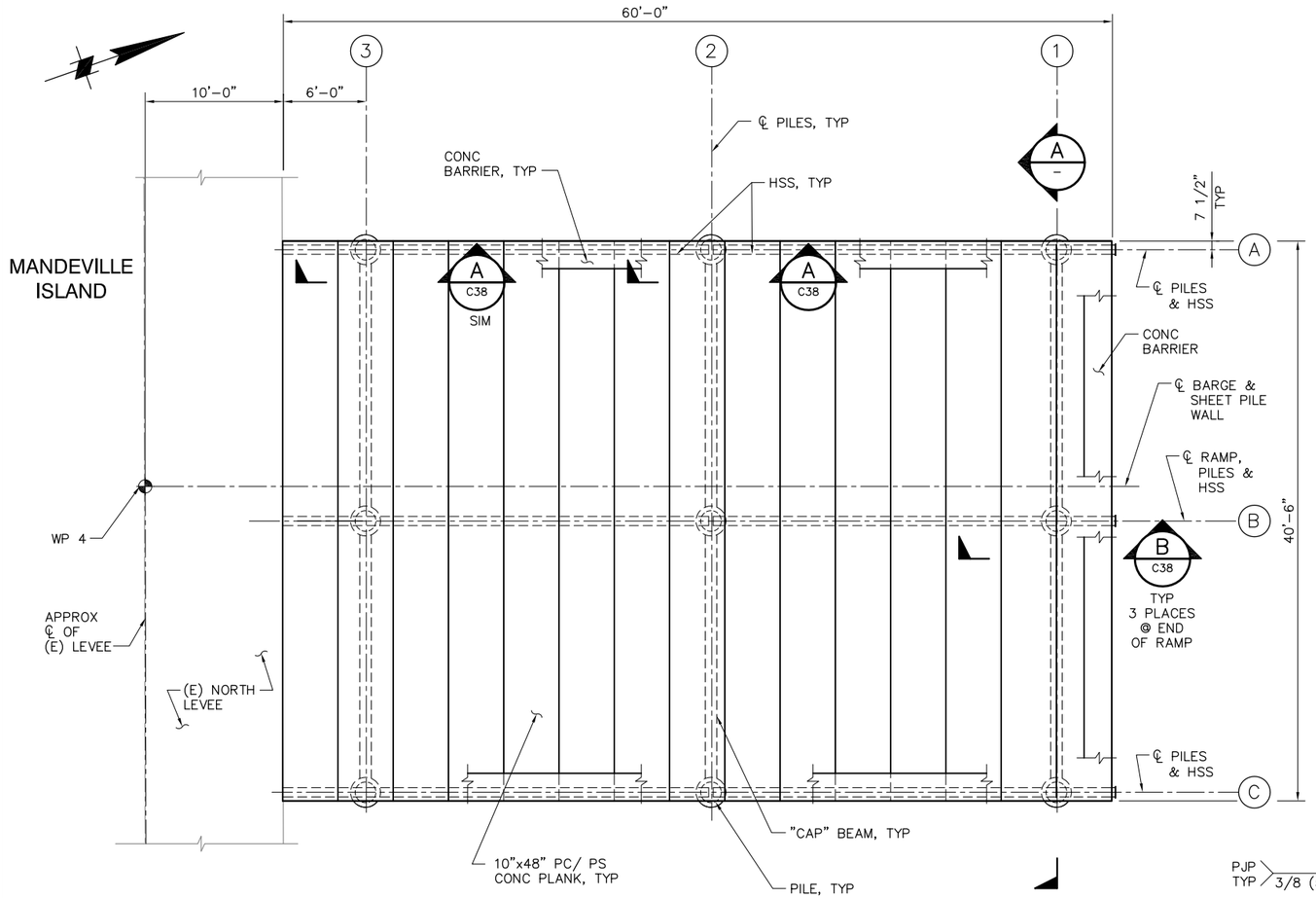

1 C36 DETAIL
SCALE: 3/16" = 1'-0"

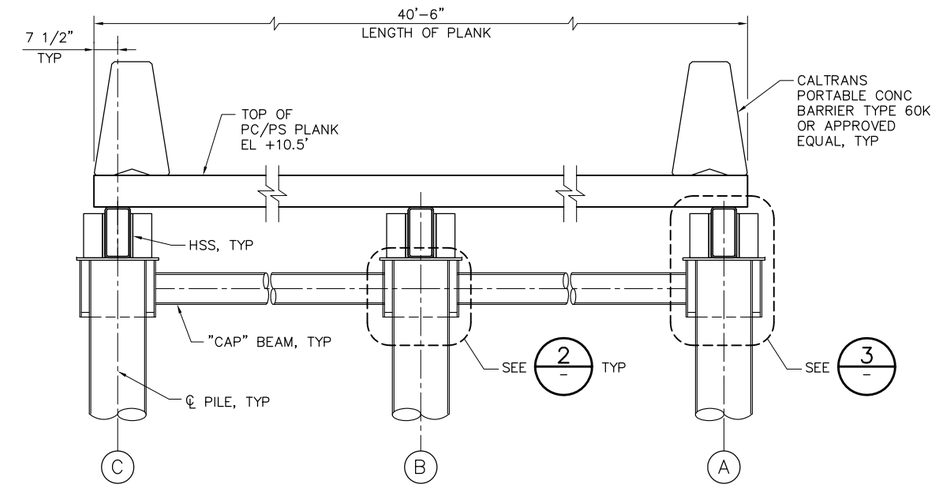

A SECTION
SCALE: 1/2"=1'-0"

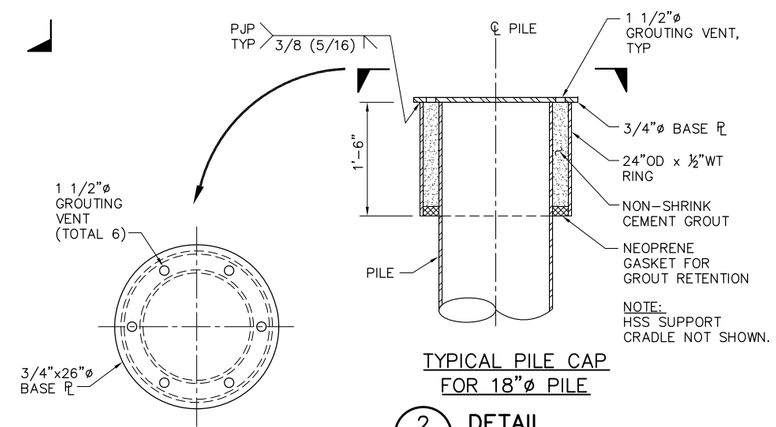

NOTE:
HSS SUPPORT CRADLE NOT SHOWN.

TYPICAL PILE CAP FOR 18"ø PILE

2 C39 DETAIL
SCALE: 1" = 1'-0"

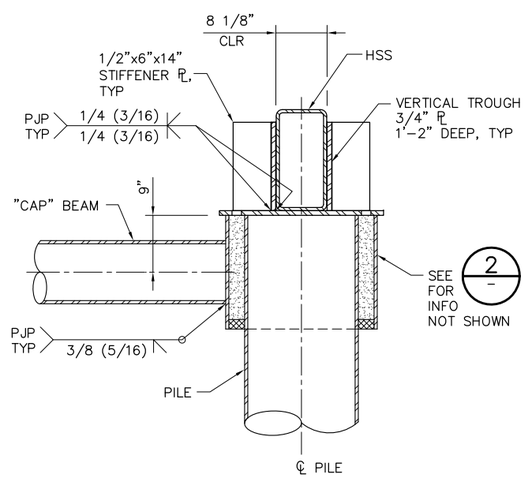

3 DETAIL
SCALE: 1" = 1'-0"

NOTES:

1. ALL PC/PS PLANKS SHALL BEAR ON/AGAINST NEOPRENE "UNDERLAYMENT" BEARING STRIP WITH A MINIMUM 1/8" THICKNESS.

WELDING NOTE:

ALL STIFFENER PLATES SHALL HAVE DOUBLE SIDED 1/4" FILLET WELDS UON.

1'-0" 0'-0" 1'-0" 2'-0"
SCALE: 1"=1'-0"

100% SUBMITTAL REVISION 1

IF SHEET IS LESS THAN 22" x 34" IT IS A REDUCED PRINT – SCALE REDUCED ACCORDINGLY.

REVISION	DESCRIPTION	BY	DATE

San Luis & Delta-Mendota Water Authority
842 6th Street, Suite 7
PO Box 2157
Los Banos, California 93635

Moffatt & Nichol
2001 N. Main Street, Suite 360
Walnut Creek, California 94596
(925) 944-5411

DSGN	DR	CHK
JMB	EP/AB	TDB
JOB NO. 6097-03	SUBMITTED BY RMR	

2-GATES FISH PROTECTION DEMONSTRATION PROJECT

CONNECTION SLOUGH
BOAT RAMP DETAILS AND SECTIONS
SHEET 1

DATE 10/02/09
SHEET 41 OF 78
C37

P:\6097-03 SWC GATE DESIGN\CADD\DWG\609703-C37.DWG 9/1/2009 9:53 AM

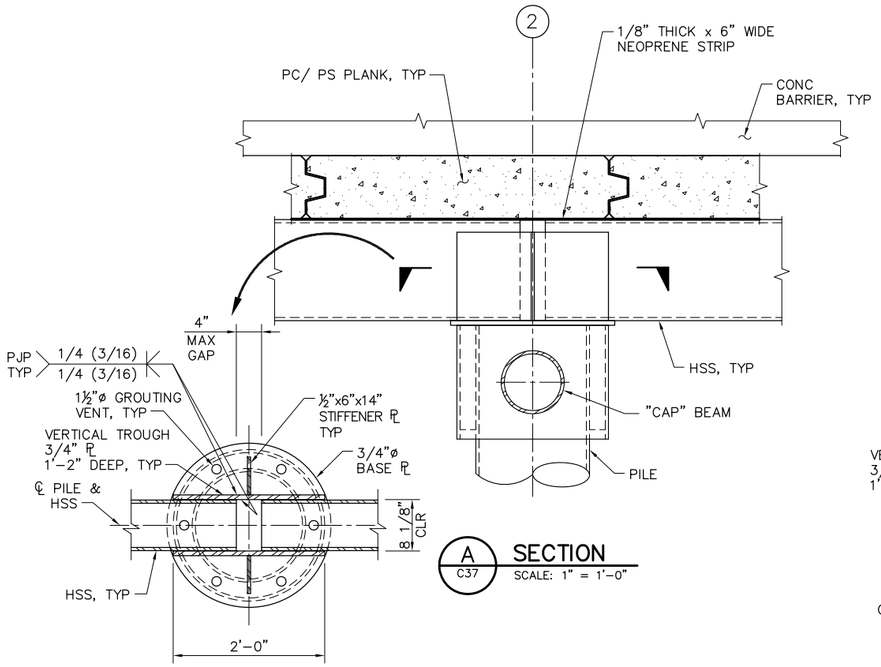

A C37 SECTION
SCALE: 1" = 1'-0"

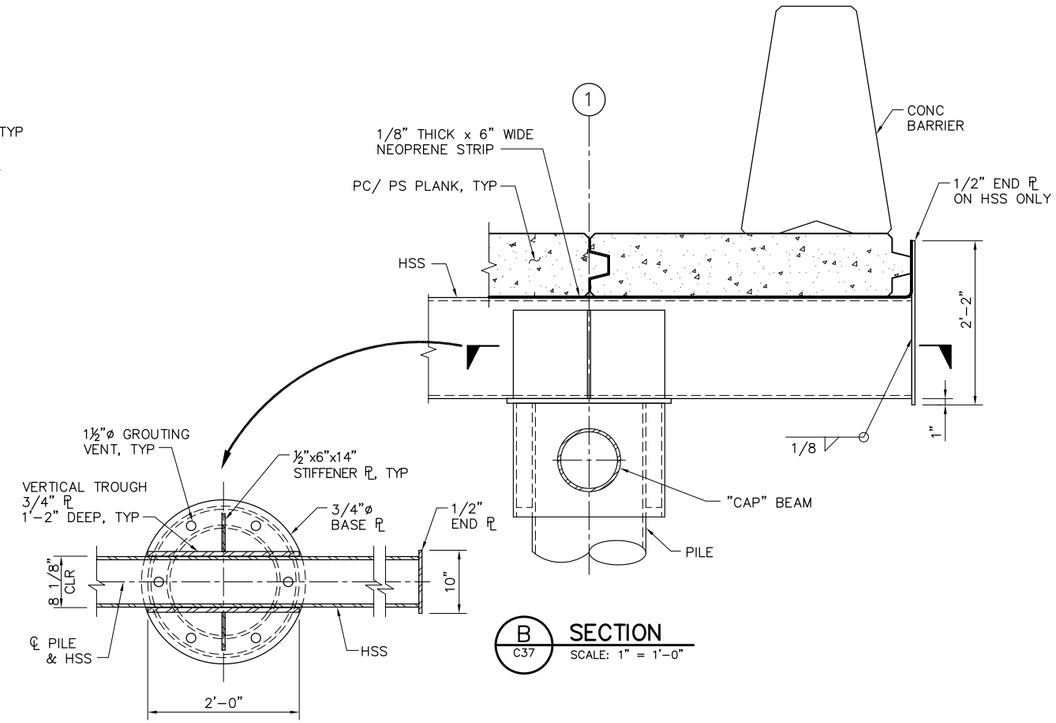

B C37 SECTION
SCALE: 1" = 1'-0"

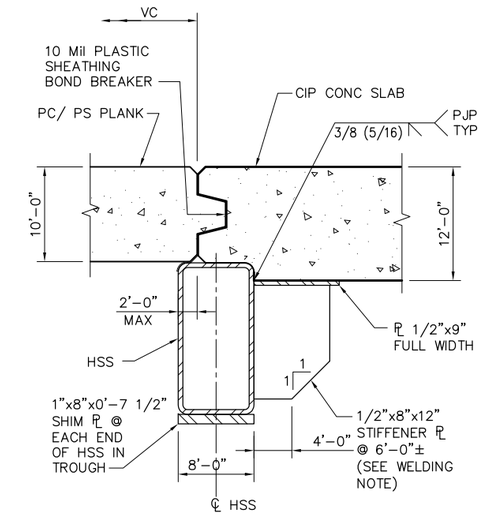

C C39 SECTION
SCALE: 1 1/2" = 1'-0"

WELDING NOTE:

ALL STIFFENER PLATES SHALL HAVE DOUBLE SIDED 1/4" FILLET WELDS UON.

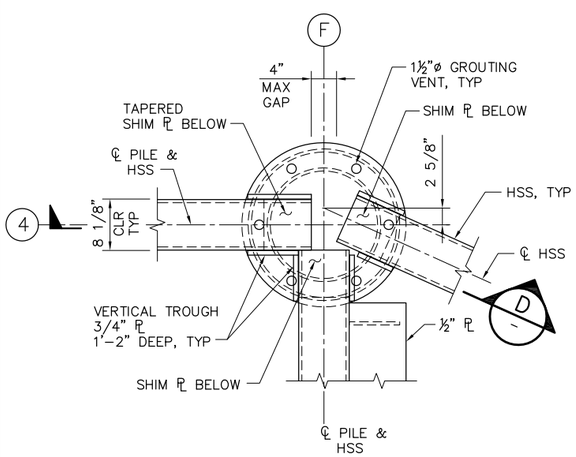

1 C36.2 DETAIL
SCALE: 1" = 1'-0"

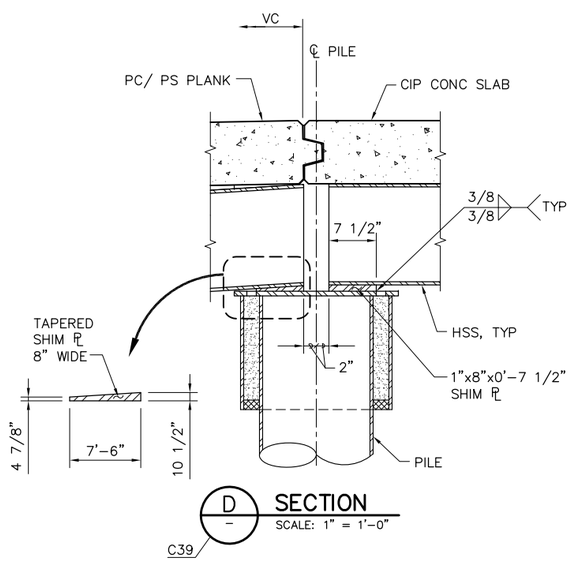

D – SECTION
SCALE: 1" = 1'-0"

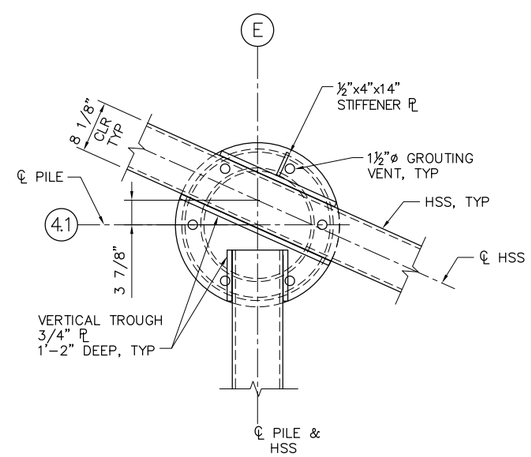

2 C36.2 DETAIL
SCALE: 1" = 1'-0"

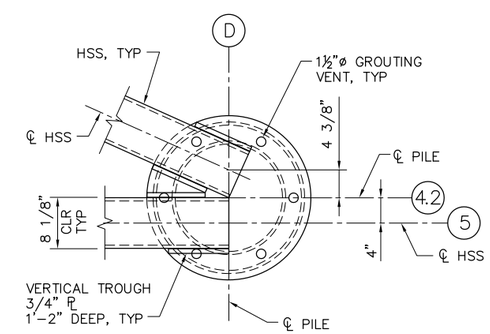

3 C36.2 DETAIL
SCALE: 1" = 1'-0"

1'-0" 0'-0" 1'-0" 2'-0"
SCALE: 1"=1'-0"

100% SUBMITTAL REVISION 1

IF SHEET IS LESS THAN 22" x 34" IT IS A REDUCED PRINT – SCALE REDUCED ACCORDINGLY.

REVISION	DESCRIPTION	BY	DATE

San Luis & Delta-Mendota Water Authority
842 6th Street, Suite 7
PO Box 2157
Los Banos, California 93635

Moffatt & Nichol
2001 N. Main Street, Suite 360
Walnut Creek, California 94596
(925) 944-5411

DSGN	DR	CHK
JMB	EP	TDB
JOB NO. 6097-03	SUBMITTED BY RMR	

2-GATES FISH PROTECTION DEMONSTRATION PROJECT

CONNECTION SLOUGH BOAT RAMP DETAILS AND SECTIONS SHEET 2

DATE 10/02/09

SHEET 42 OF 78

C38

P:\6097-03 SWC GATE DESIGN\CADD\DWG\609703-C38.DWG 9/1/2009 9:53 AM

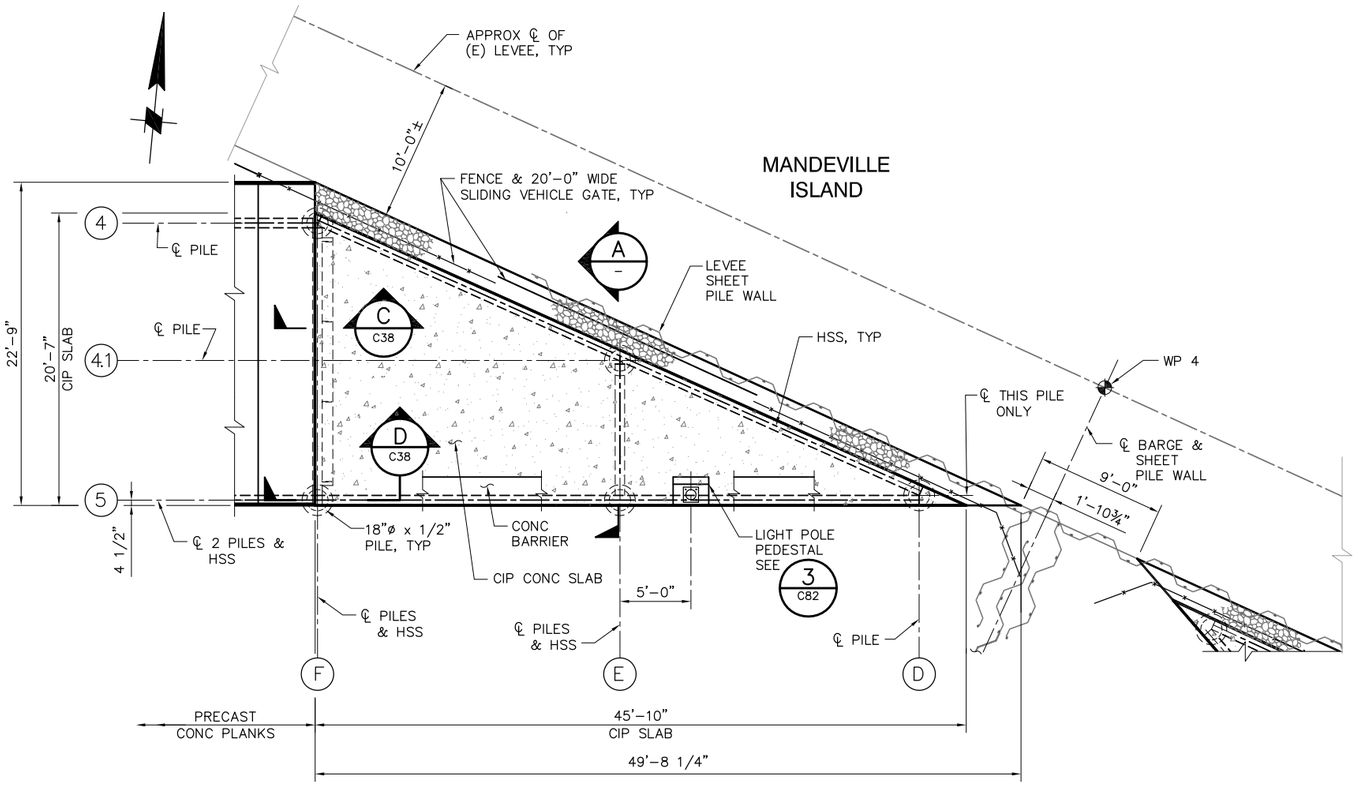

2 C36 DETAIL
SCALE: 3/16" = 1'-0"

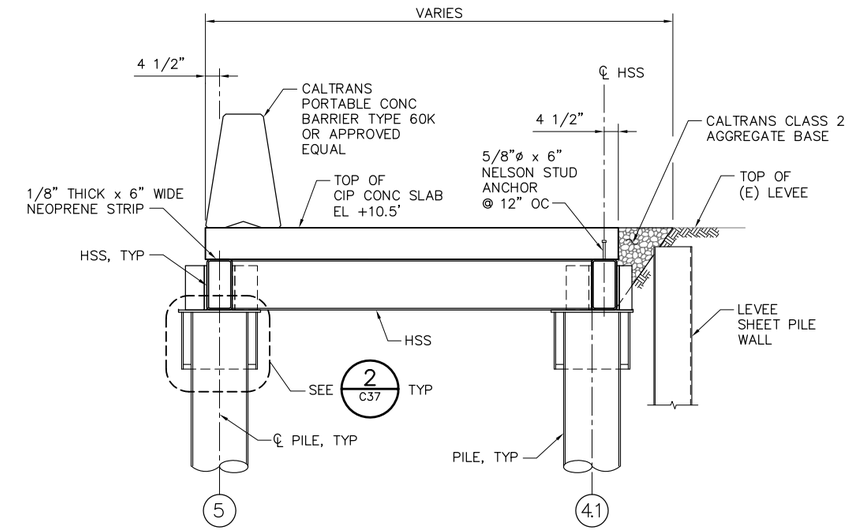

A – SECTION
SCALE: 1/2"=1'-0"

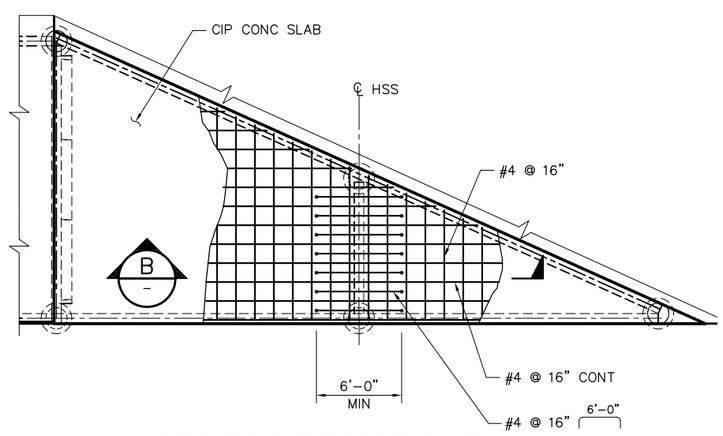

TOP SLAB REINFORCEMENT
SCALE: 3/16"= 1'-0"

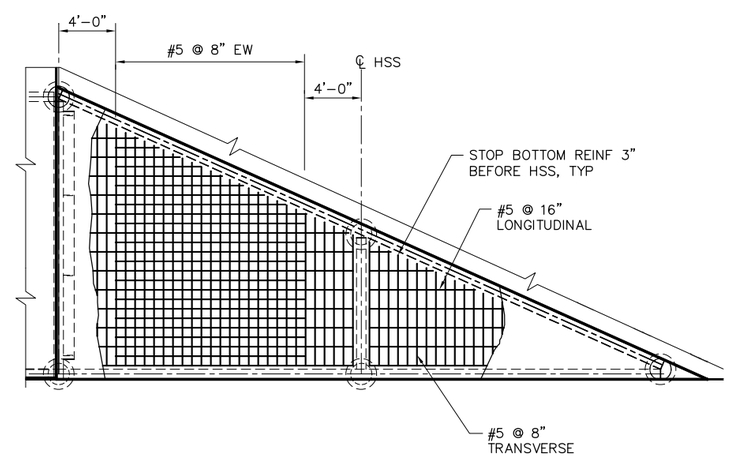

BOTTOM SLAB REINFORCEMENT
SCALE: 3/16"= 1'-0"

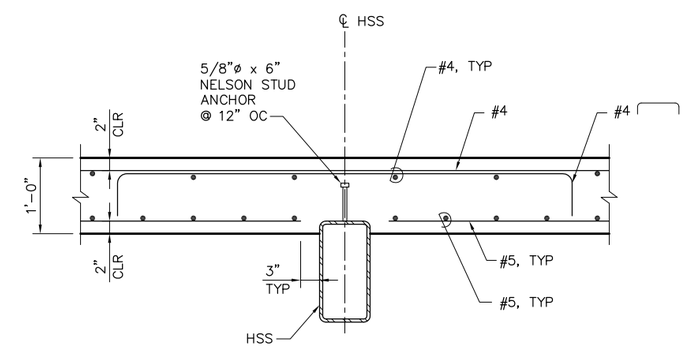

B – SECTION
SCALE: 1" = 1'-0"

1'-0" 0'-0" 1'-0" 2'-0"
SCALE: 1"=1'-0"

100% SUBMITTAL REVISION 1

IF SHEET IS LESS THAN 22" x 34" IT IS A REDUCED PRINT – SCALE REDUCED ACCORDINGLY.

REVISION	DESCRIPTION	BY	DATE

San Luis & Delta-Mendota Water Authority
842 6th Street, Suite 7
PO Box 2157
Los Banos, California 93635

Moffatt & Nichol
2001 N. Main Street, Suite 360
Walnut Creek, California 94596
(925) 944-5411

DSGN	DR	CHK
JMB	EP/AB	TDB
JOB NO. 6097-03	SUBMITTED BY RMR	

2-GATES FISH PROTECTION DEMONSTRATION PROJECT

CONNECTION SLOUGH
BOAT RAMP DETAILS AND SECTIONS
SHEET 3

DATE 10/02/09
SHEET 43 OF 78
C39

P:\6097-03 SWC GATE DESIGN\CADD\DWG\609703-C39.DWG 9/2/2009 10:57 AM

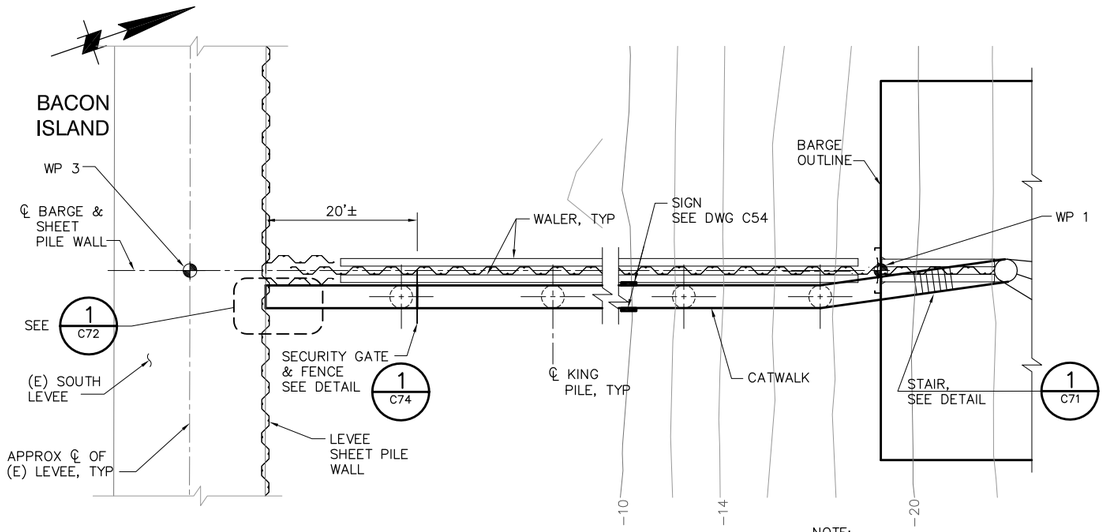

1/– PLAN
SCALE: 1"=10'

NOTE:
SUBMERGED SHEET PILE ENCLOSURE NOT SHOWN FOR CLARITY.

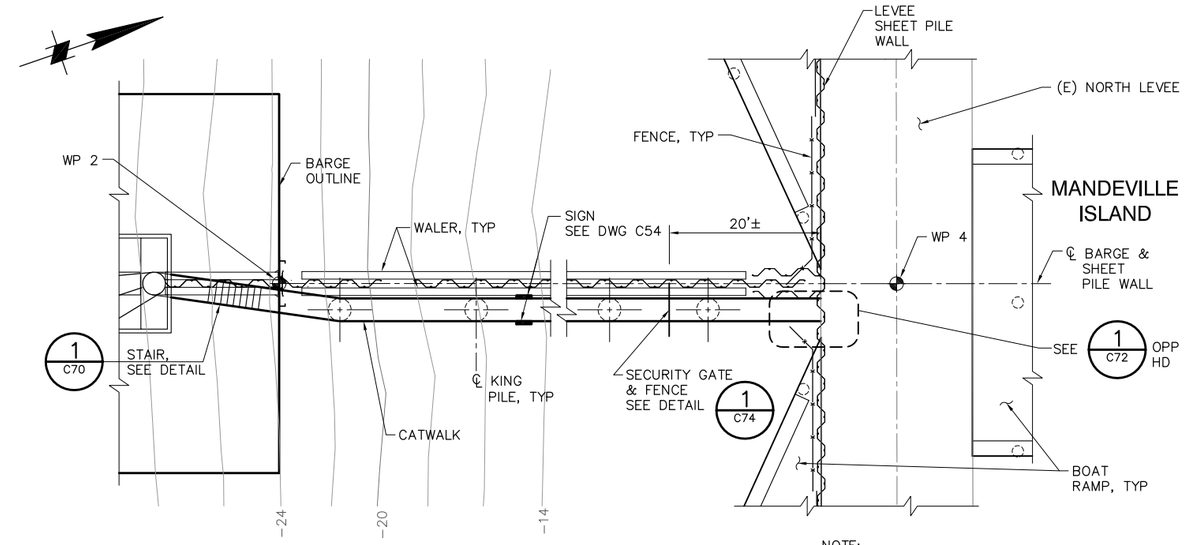

2/– PLAN
SCALE: 1"=20'

NOTE:
SUBMERGED SHEET PILE ENCLOSURE NOT SHOWN FOR CLARITY.

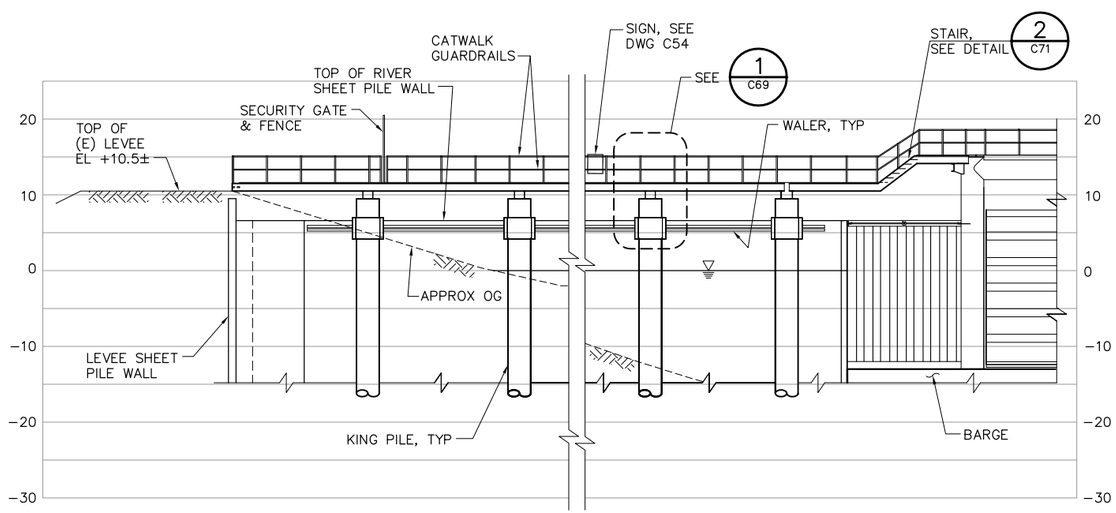

ELEVATION
SCALE: 1"= 10'

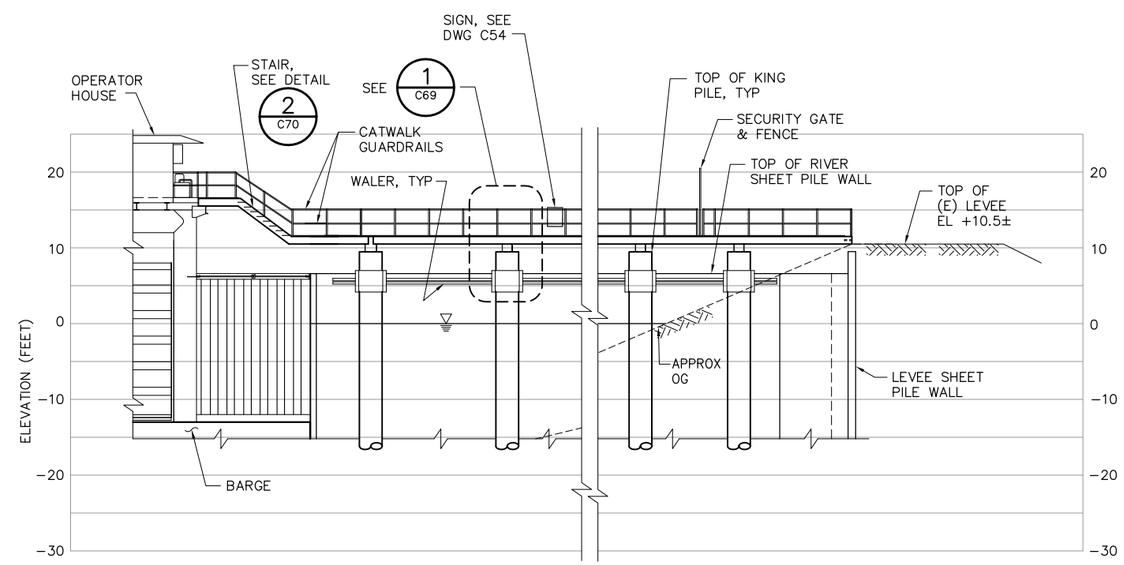

ELEVATION
SCALE: 1"= 10'

NOTE:
BOAT RAMP NOT SHOWN FOR CLARITY.

10' 0' 10' 20'
SCALE: 1"=10'

100% SUBMITTAL REVISION 1

IF SHEET IS LESS THAN 22" x 34" IT IS A REDUCED PRINT – SCALE REDUCED ACCORDINGLY.

REVISION	DESCRIPTION	BY	DATE

San Luis & Delta-Mendota Water Authority
842 6th Street, Suite 7
PO Box 2157
Los Banos, California 93635

Moffatt & Nichol
2001 N. Main Street, Suite 360
Walnut Creek, California 94596
(925) 944-5411

DSGN	DR	CHK
JMB	EP/AB	TDB
JOB NO. 6097-03	SUBMITTED BY RMR	

2-GATES FISH PROTECTION DEMONSTRATION PROJECT

CONNECTION SLOUGH CATWALK PLAN AND ELEVATION

DATE 10/02/09

SHEET 44 OF 78

C40

P:\6097-03 SWC GATE DESIGN\CADD\DWG\609703-C40.DWG 9/29/2009 11:48 AM

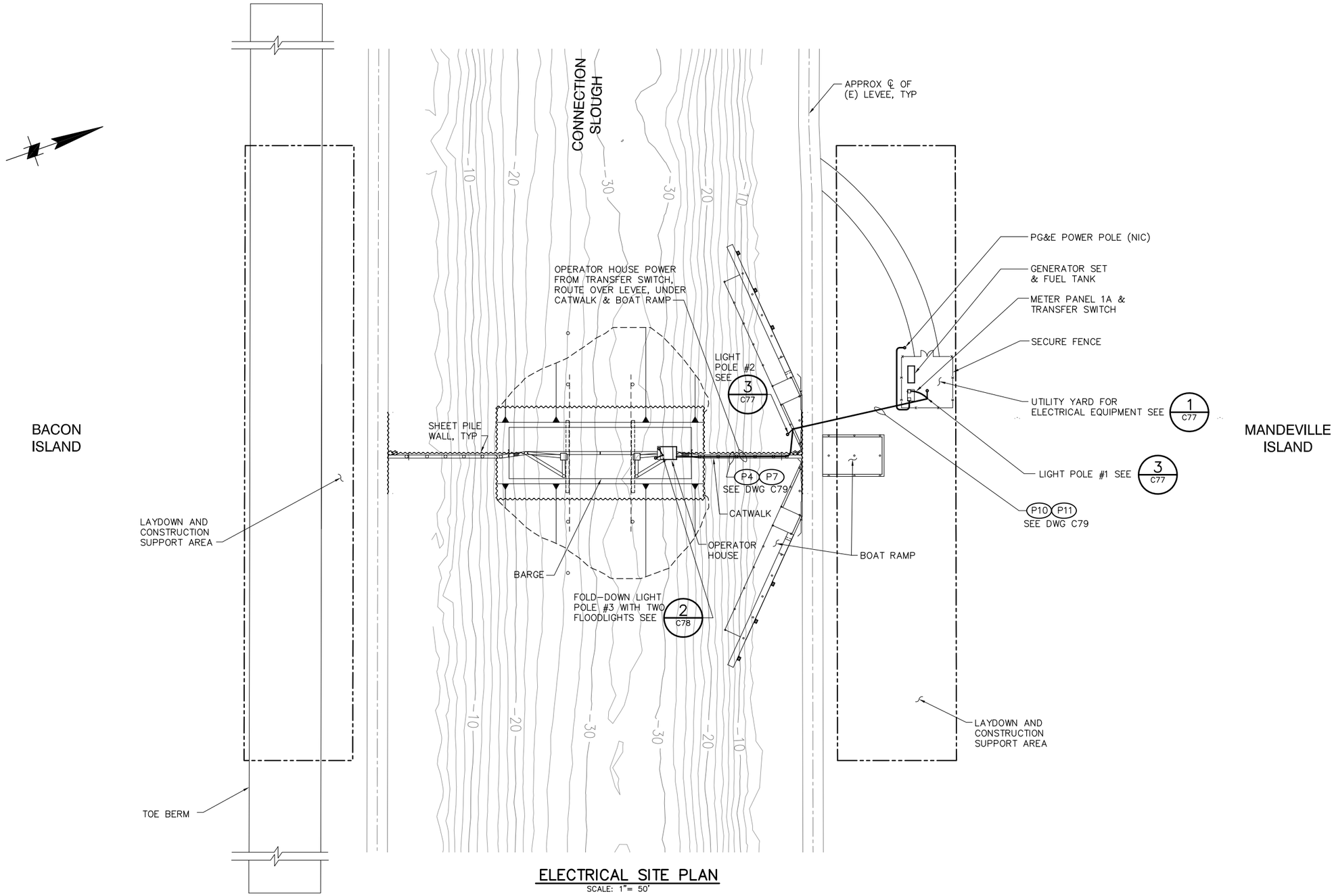

ELECTRICAL SITE PLAN

SCALE: 1"= 50'

50' 0' 50' 100'

SCALE: 1"=50'

100% SUBMITTAL REVISION 1

IF SHEET IS LESS THAN 22" x 34" IT IS A REDUCED PRINT – SCALE REDUCED ACCORDINGLY.

REVISION	DESCRIPTION	BY	DATE

San Luis & Delta-Mendota Water Authority
842 6th Street, Suite 7
PO Box 2157
Los Banos, California 93635

Moffatt & Nichol
2001 N. Main Street, Suite 360
Walnut Creek, California 94596
(925) 944-5411

DSGN	DR	CHK
DM	AB	CBS
JOB NO. 6097-03	SUBMITTED BY RMR	

2-GATES FISH PROTECTION DEMONSTRATION PROJECT

CONNECTION SLOUGH ELECTRICAL SITE PLAN

DATE 10/02/09

SHEET 45 OF 78

C41

P:\6097-03 SWC GATE DESIGN\CADD\DWG\609703-C41.DWG 10/1/2009 10:45 AM

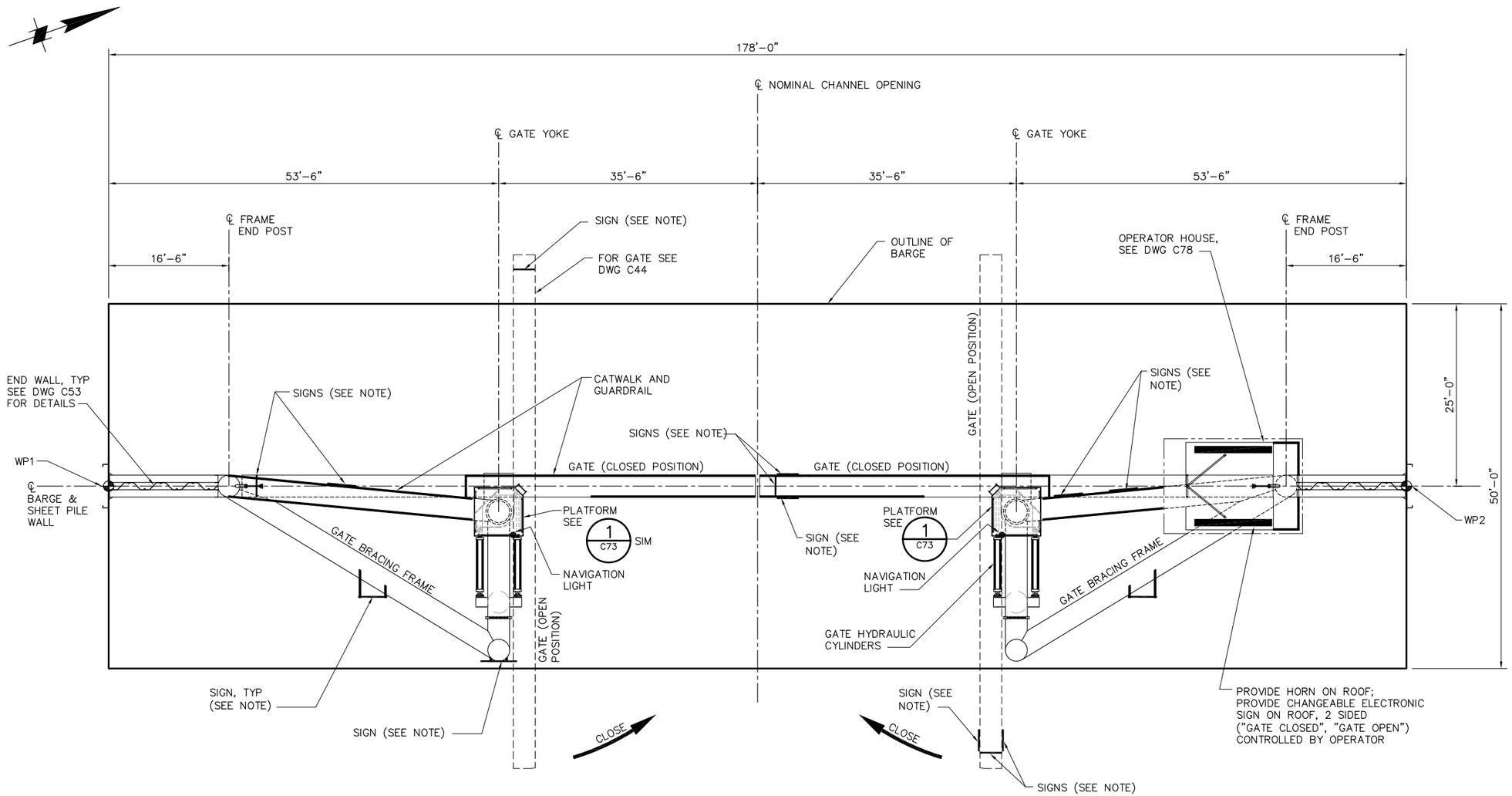

BARGE PLAN

SCALE: 1/8"= 1'-0"

NOTE:

FOR SIGNAGE, SEE DRAWING C54.

8'-0" 0'-0" 8'-0" 16'-0"

SCALE: 1/8"=1'-0"

100% SUBMITTAL REVISION 1

IF SHEET IS LESS THAN 22" x 34" IT IS A REDUCED PRINT – SCALE REDUCED ACCORDINGLY.

REVISION	DESCRIPTION	BY	DATE

San Luis & Delta-Mendota Water Authority
842 6th Street, Suite 7
PO Box 2157
Los Banos, California 93635

Moffatt & Nichol
2001 N. Main Street, Suite 360
Walnut Creek, California 94596
(925) 944-5411

DSGN	DR	CHK
CBS	AB/EP	TDB
JOB NO. 6097-03	SUBMITTED BY RMR	

2-GATES FISH PROTECTION DEMONSTRATION PROJECT

CONNECTION SLOUGH BARGE GENERAL ARRANGEMENT PLAN

DATE 10/02/09

SHEET 46 OF 78

C42

P:\6097-03 SWC GATE DESIGN\CADD\DWG\609703-C42.DWG 9/29/2009 12:06 PM

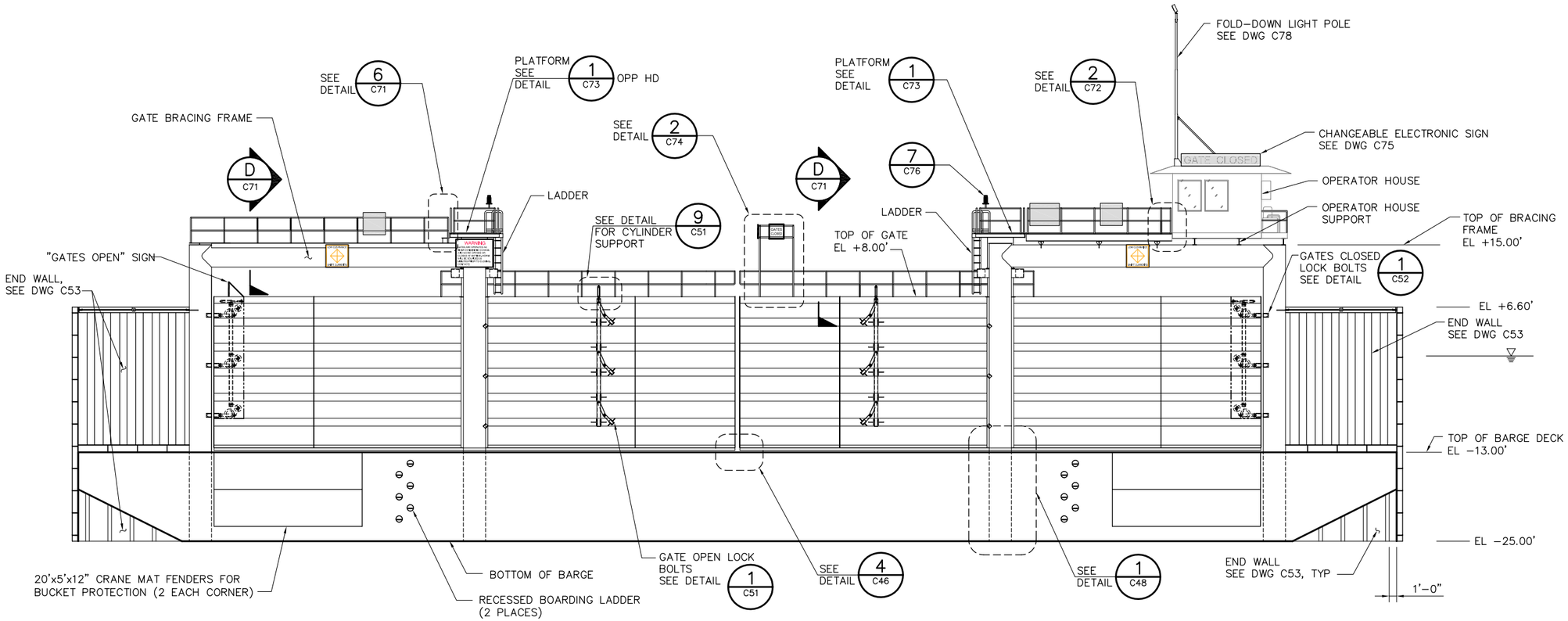

ELEVATION

SCALE: 1/8"= 1'-0"

NOTES:

1. FOR SIGNAGE SEE DRAWING C54.
2. FOR CATWALK STAIRWAY SEE DRAWING C40.

8'-0" 0'-0" 8'-0" 16'-0"

SCALE: 1/8"=1'-0"

100% SUBMITTAL REVISION 1

IF SHEET IS LESS THAN 22" x 34" IT IS A REDUCED PRINT – SCALE REDUCED ACCORDINGLY.

REVISION	DESCRIPTION	BY	DATE

San Luis & Delta-Mendota Water Authority
842 6th Street, Suite 7
PO Box 2157
Los Banos, California 93635

Moffatt & Nichol
2001 N. Main Street, Suite 360
Walnut Creek, California 94596
(925) 944-5411

DSGN	DR	CHK
JMB	AB/EP	TDB
JOB NO. 6097-03	SUBMITTED BY RMR	

2-GATES FISH PROTECTION DEMONSTRATION PROJECT

CONNECTION SLOUGH BARGE GENERAL ARRANGEMENT ELEVATION

DATE 10/02/09

SHEET 47 OF 78

C43

P:\6097-03 SWC GATE DESIGN\CADD\DWG\609703-C43.DWG 9/29/2009 12:07 PM

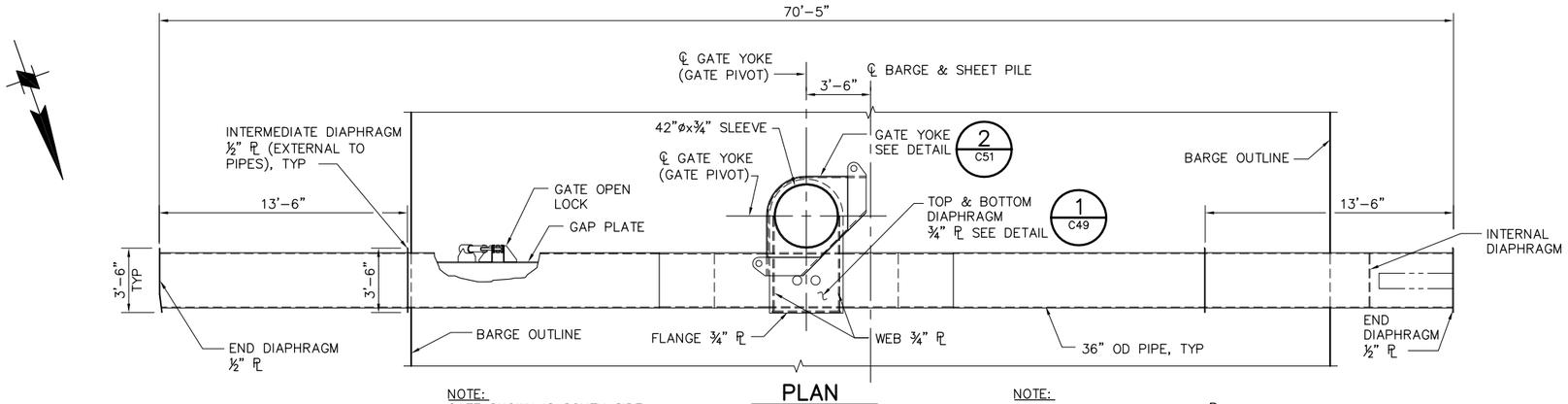

NOTE:
GATE SHOWN IS SOUTH SIDE. NORTH SIDE GATE IS MIRROR IMAGE.

PLAN

SCALE: 1/4"= 1'-0"
(GATE SHOWN IN OPEN POSITION)

NOTE:
TOPPING CHECKERED STEEL ℙ, TOPPING WEB PLATES AND VERTICAL PIVOT NOT SHOWN FOR CLARITY.

WELDING NOTES:

1. ALL GATE AND PIPE FRAMING STRUCTURAL WELDS SHALL BE COMPETE JOINT PENETRATION (CJP) WELDS UON.
2. BACKING BARS SHALL NOT BE LEFT IN PLACE
3. ALL WELDS SHALL BE PREQUALIFIED.
4. ALL WELDING AND NON-DESTRUCTIVE TESTING (N.D.T.) INSPECTIONS SHALL BE IN ACCORDANCE WITH AWS-D1.1.

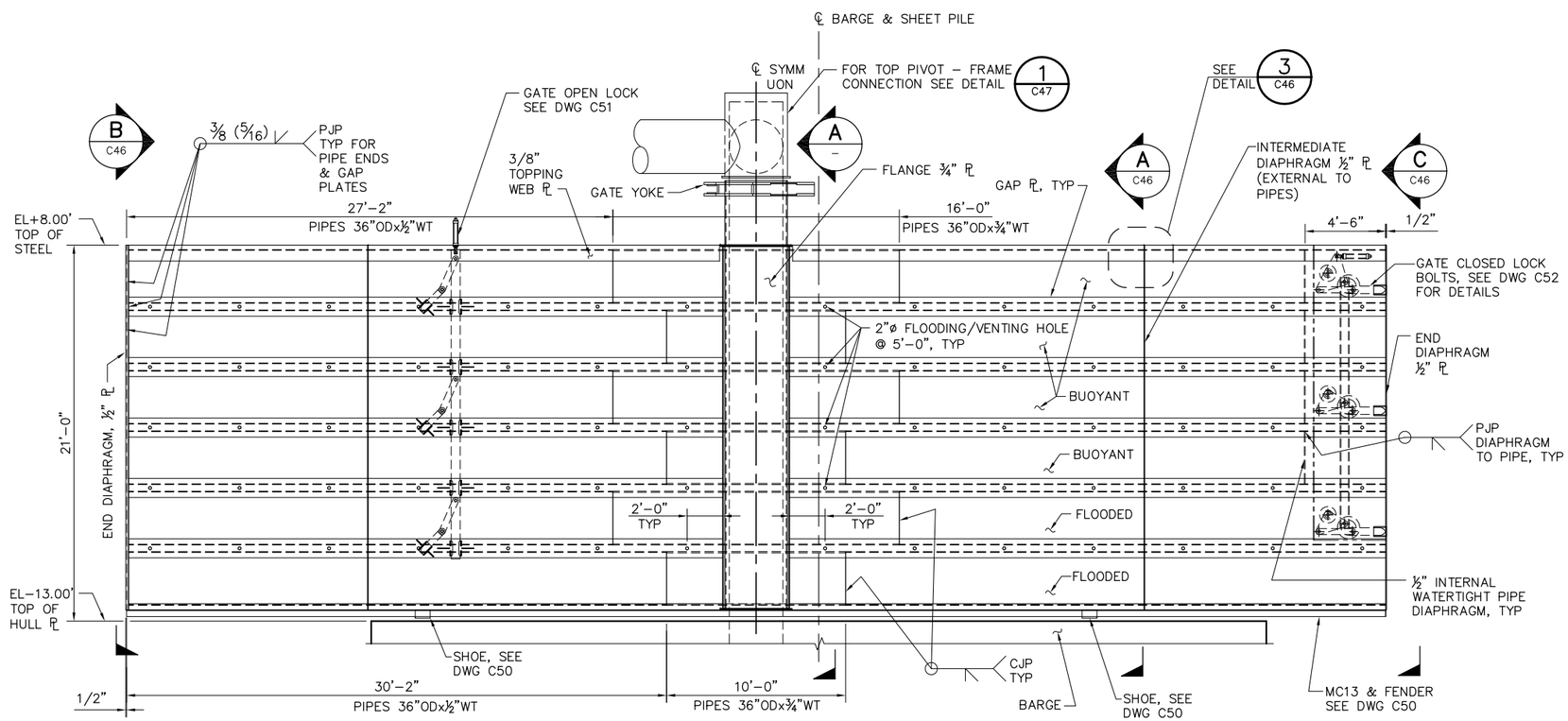

ELEVATION

SCALE: 1/4"= 1'-0"
(GATE SHOWN IN OPEN POSITION)

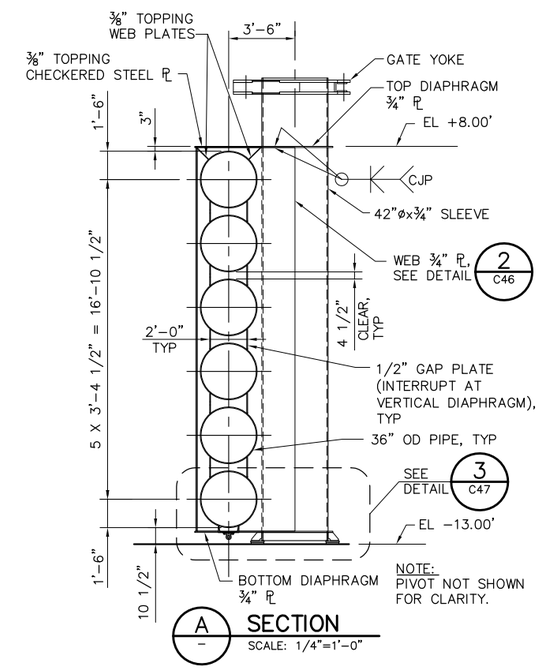

NOTE:
PIVOT NOT SHOWN FOR CLARITY.

A SECTION

SCALE: 1/4"=1'-0"

4'-0" 0'-0" 4'-0" 8'-0"
SCALE: 1/4"=1'-0"

100% SUBMITTAL REVISION 1

IF SHEET IS LESS THAN 22" x 34" IT IS A REDUCED PRINT – SCALE REDUCED ACCORDINGLY.

REVISION	DESCRIPTION	BY	DATE

San Luis & Delta-Mendota Water Authority
842 6th Street, Suite 7
PO Box 2157
Los Banos, California 93635

Moffatt & Nichol
2001 N. Main Street, Suite 360
Walnut Creek, California 94596
(925) 944-5411

DSGN	DR	CHK
JMB	AB/EP	CBS
JOB NO. 6097-03	SUBMITTED BY RMR	

2-GATES FISH PROTECTION DEMONSTRATION PROJECT

CONNECTION SLOUGH GATE SCANTLINGS

DATE 10/02/09

SHEET 48 OF 78

C44

P:\6097-03 SWC GATE DESIGN\CADD\DWG\609703-C44.DWG 9/29/2009 1:41 PM

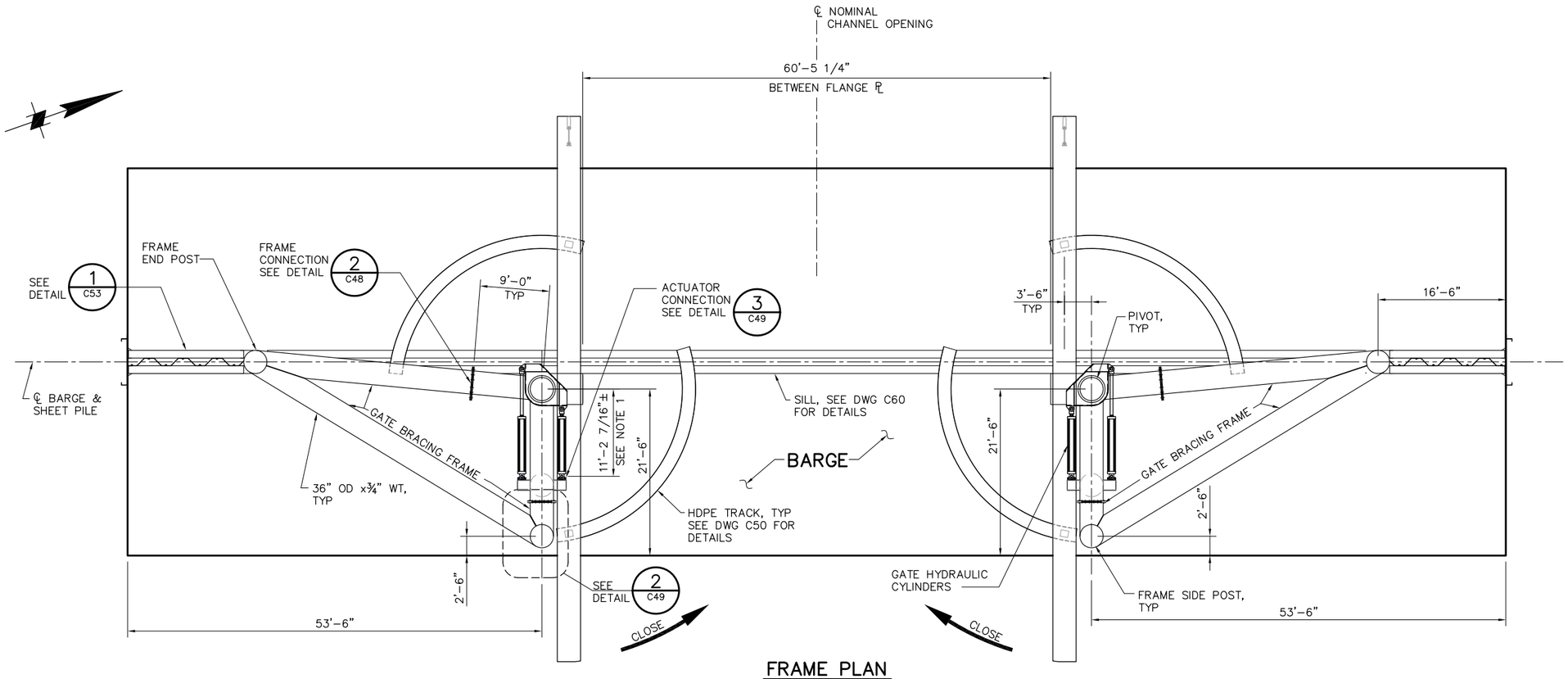

FRAME PLAN

SCALE: 1/8"= 1'-0"
(GATE SHOWN IN OPEN POSITION)

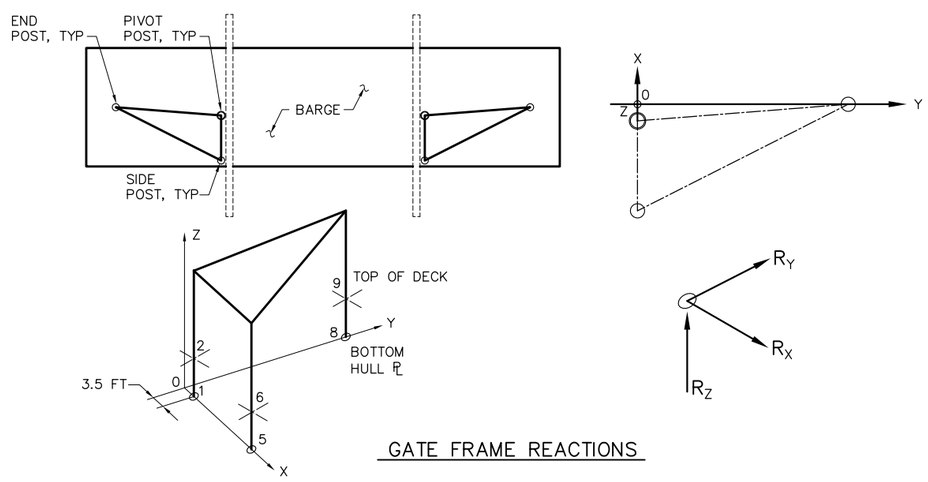

GATE FRAME REACTIONS

SERVICE LOAD REACTIONS (INCLUDES A 1.2 FACTOR)
(FOR LRFD USE A 1.6 FACTOR WITH THESE REACTIONS)

LOCATION ON BARGE	NODE	R_X (KIP)	R_Y (KIP)	R_Z (KIP)	DESCRIPTION
BOTTOM HULL ℙ	1	+140 −140	+30 −30	+200 −50	PIVOT
	5	+140 −140	−40 +40	−60 +170	SIDE POST
	8	+50 −50	+30 −30	+100	END POST
TOP OF DECK	2	+500 −500	−50 +50	0	PIVOT
	6	+260 −260	−60 +60	0	SIDE POST
	9	+100 −100	−50 +50	0	END POST

NOTE: CONTRACTOR SHALL PROVIDE A BARGE ADEQUATE TO SUPPORT THESE LOADS.

NOTES:

1. DIMENSION MAY VARY DEPENDING ON ACTUATOR VENDER.

8'-0" 0'-0" 8'-0" 16'-0"
SCALE: 1/8"=1'-0"

100% SUBMITTAL REVISION 1

IF SHEET IS LESS THAN 22" x 34" IT IS A REDUCED PRINT – SCALE REDUCED ACCORDINGLY.

REVISION	DESCRIPTION	BY	DATE

San Luis & Delta-Mendota Water Authority
842 6th Street, Suite 7
PO Box 2157
Los Banos, California 93635

Moffatt & Nichol
2001 N. Main Street, Suite 360
Walnut Creek, California 94596
(925) 944-5411

DSGN	DR	CHK
CBS	AB	TDB
JOB NO. 6097-03	SUBMITTED BY RMR	

2-GATES FISH PROTECTION DEMONSTRATION PROJECT

CONNECTION SLOUGH GATE FRAMING LAYOUT

DATE 10/02/09

SHEET 49 OF 78

C45

P:\6097-03 SWC GATE DESIGN\CADD\DWG\609703-C45.DWG 9/1/2009 9:56 AM

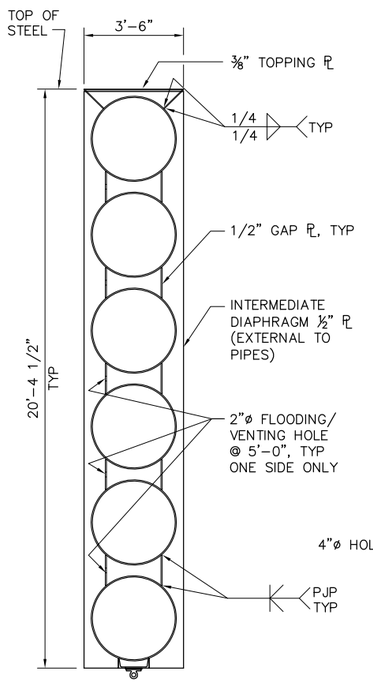

A C44 SECTION
SCALE: 3/8"=1'-0"

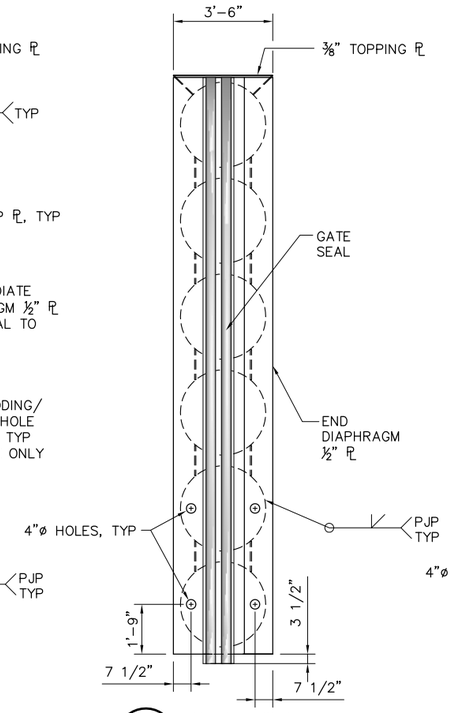

B C44 ELEVATION
SCALE: 3/8"=1'-0"

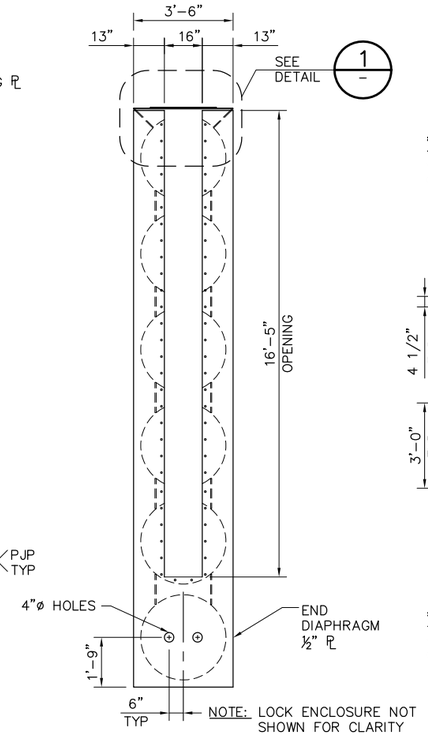

C C44 ELEVATION
SCALE: 3/8"=1'-0"

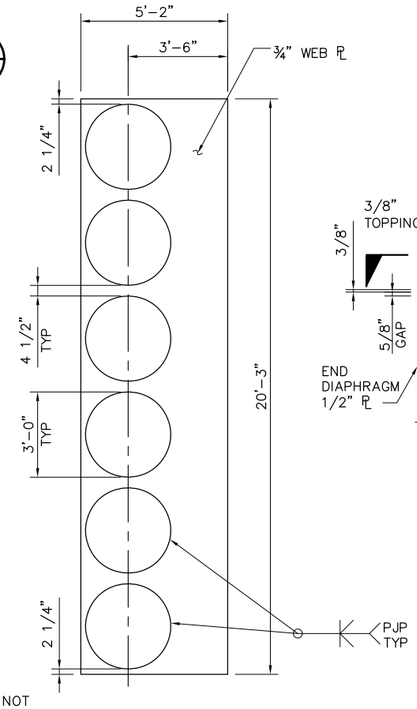

2 C44 WEB PLATE DETAIL
SCALE: 3/8"=1'-0"

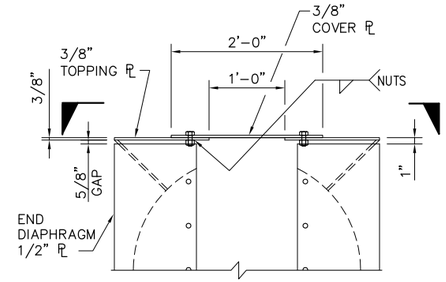

1 DETAIL
SCALE: 1" = 1'-0"

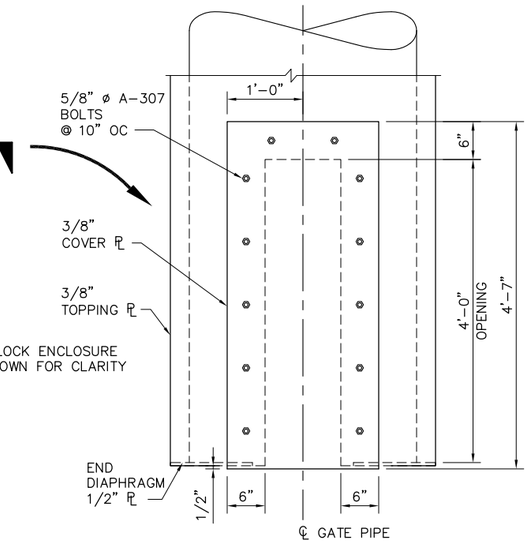

NOTE: LOCK ENCLOSURE NOT SHOWN FOR CLARITY

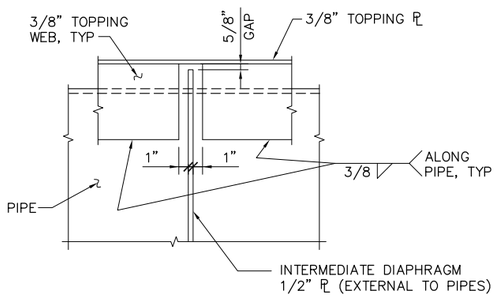

3 C44 DETAIL
SCALE: 1 1/2" = 1'-0"

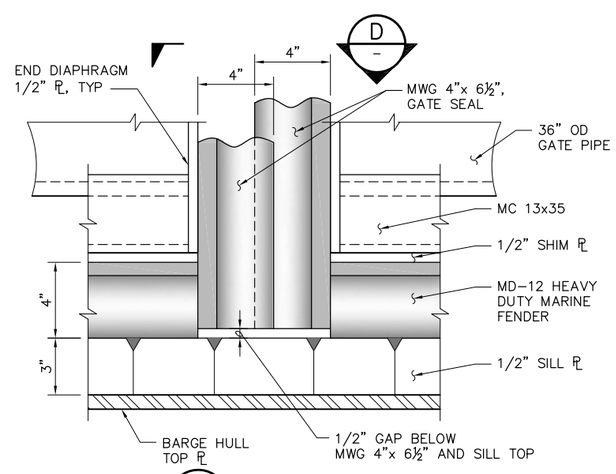

4 C43 DETAIL
SCALE: 3" = 1'-0"

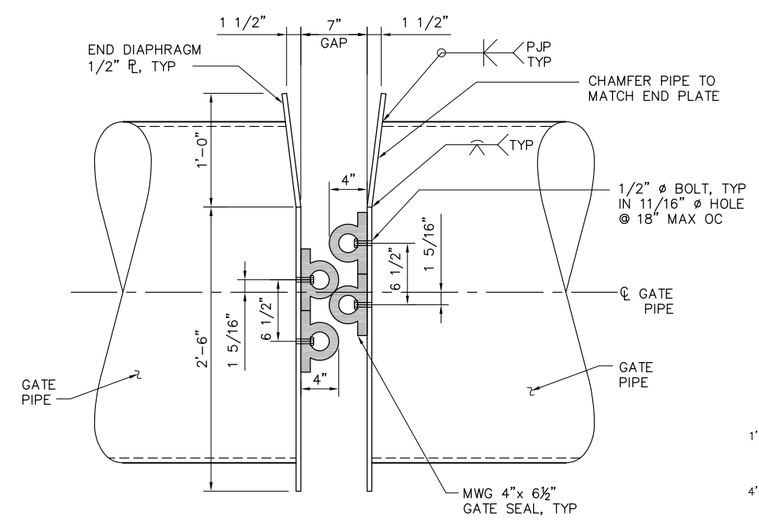

D SECTION
SCALE: 1 1/2" = 1'-0"

NOTE:
CHAMFER CATWALK TOPPING CHECKER PL ABOVE GATE MATING ENDS, TO PERMIT RELATIVE OPENING MOVEMENTS.

1'-0" 0'-0" 6" 1'-0"
SCALE: 1 1/2"=1'-0"

4'-0" 0'-0" 2'-0" 4'-0"
SCALE: 3/8"=1'-0"

100% SUBMITTAL REVISION 1

IF SHEET IS LESS THAN 22" x 34" IT IS A REDUCED PRINT – SCALE REDUCED ACCORDINGLY.

REVISION	DESCRIPTION	BY	DATE

San Luis & Delta-Mendota Water Authority
842 6th Street, Suite 7
PO Box 2157
Los Banos, California 93635

Moffatt & Nichol
2001 N. Main Street, Suite 360
Walnut Creek, California 94596
(925) 944-5411

DSGN	DR	CHK
JMB	AB/EP	TDB
JOB NO. 6097-03	SUBMITTED BY RMR	

2-GATES FISH PROTECTION DEMONSTRATION PROJECT

CONNECTION SLOUGH GATE STRUCTURAL DETAILS , SHEET 1

DATE 10/02/09

SHEET 50 OF 78

C46

P:\6097-03 SWC GATE DESIGN\CADD\DWG\609703-C46.DWG 9/29/2009 2:12 PM

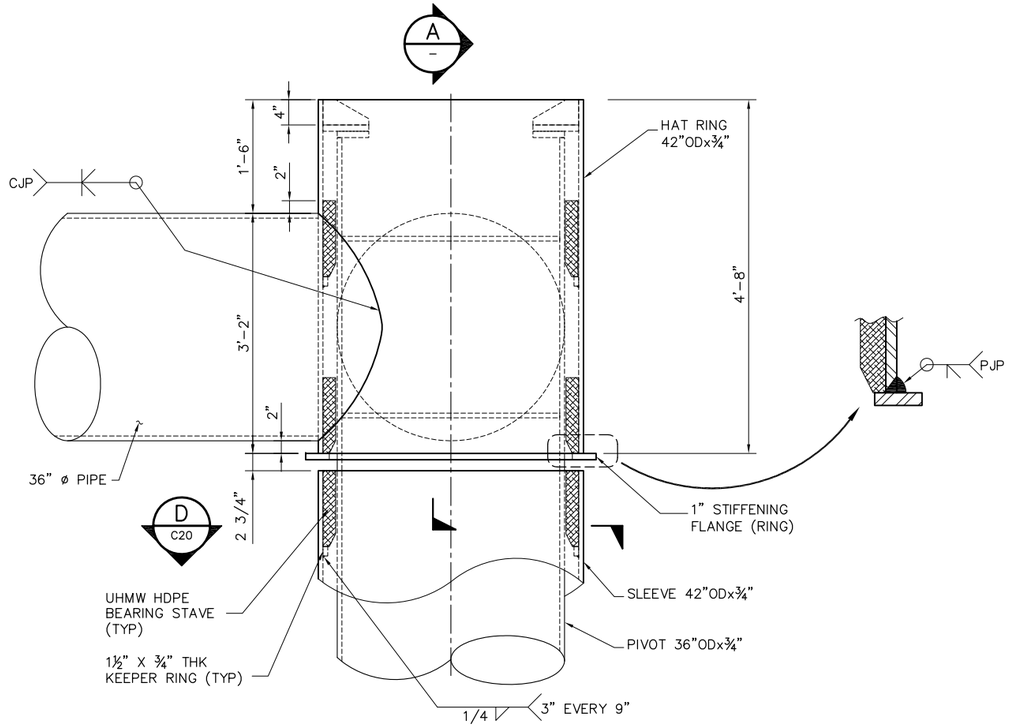

1 C44 TOP PIVOT – FRAME CONNECTION
SCALE: 1" = 1'–0"

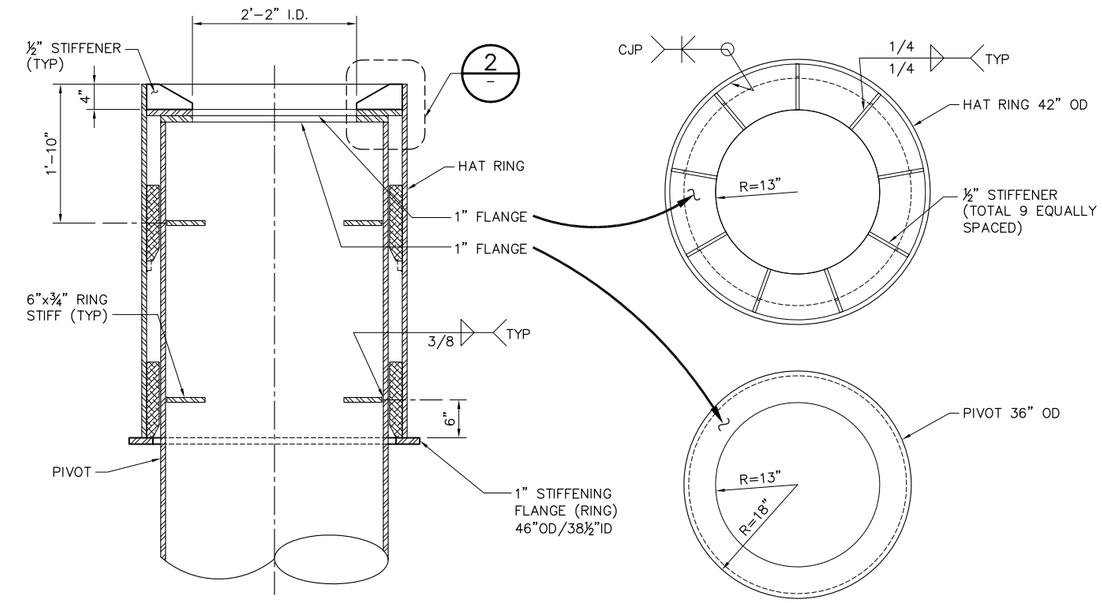

A – SECTION
SCALE: 1" = 1'–0"

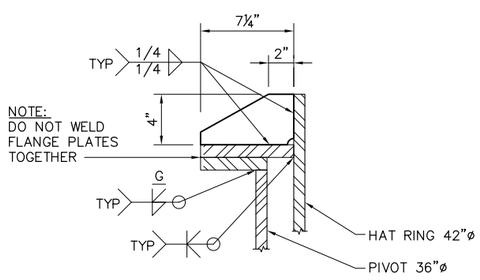

2 – DETAIL
NTS

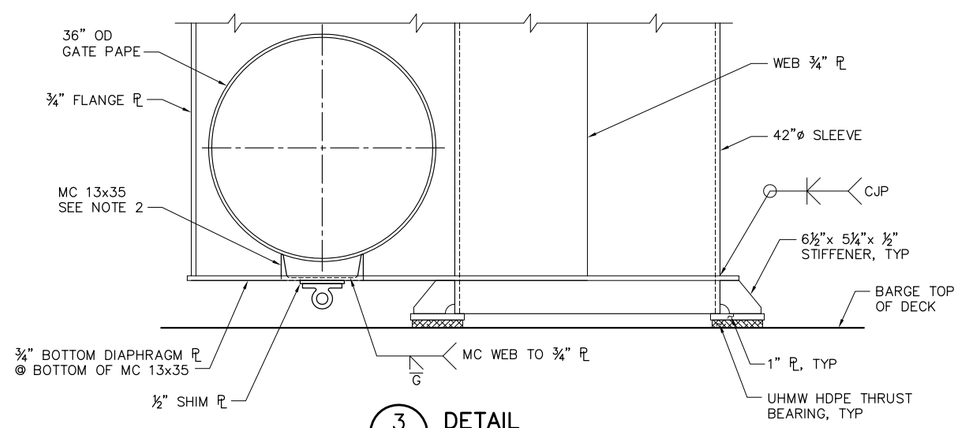

3 C44 DETAIL
SCALE: 1" = 1'–0"

NOTES:

1. ALL STIFFENER WELDS SHALL BE SYMMETRICAL ¼" MIN. FILLET WELDS U.N.O.
2. NOTCH MC 13x35 WEB AROUND BOTTOM DIAPHRAGM PLATE AND WELD AS SHOWN.

1'–0" 0'–0" 1'–0" 2'–0"
SCALE: 1"=1'–0"

100% SUBMITTAL REVISION 1

IF SHEET IS LESS THAN 22" x 34" IT IS A REDUCED PRINT – SCALE REDUCED ACCORDINGLY.

REVISION	DESCRIPTION	BY	DATE

San Luis & Delta–Mendota Water Authority
842 6th Street, Suite 7
PO Box 2157
Los Banos, California 93635

Moffatt & Nichol
2001 N. Main Street, Suite 360
Walnut Creek, California 94596
(925) 944–5411

DSGN	DR	CHK
JMB/CBS	AB/TAE/EP	TDB
JOB NO. 6097–03	SUBMITTED BY RMR	

2–GATES FISH PROTECTION DEMONSTRATION PROJECT

CONNECTION SLOUGH GATE STRUCTURAL DETAILS SHEET 2

DATE 10/02/09

SHEET 51 OF 78

C47

P:\6097–03 SWC GATE DESIGN\CADD\DWG\609703–C47.DWG 9/29/2009 2:25 PM

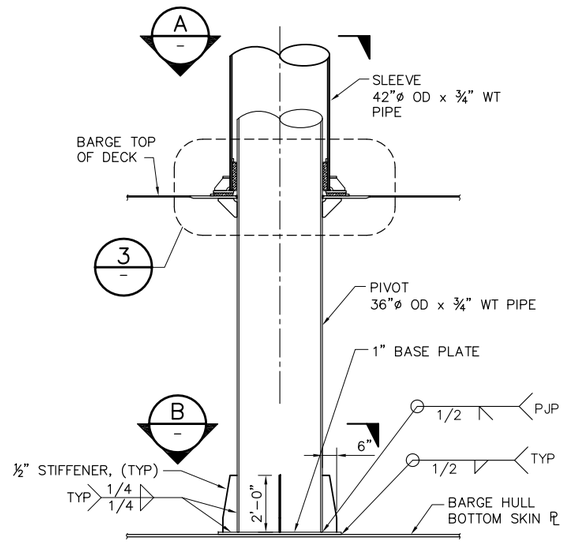

1 C43 FRAMING PIVOT CONNECTION
SCALE: 3/8" = 1'-0"

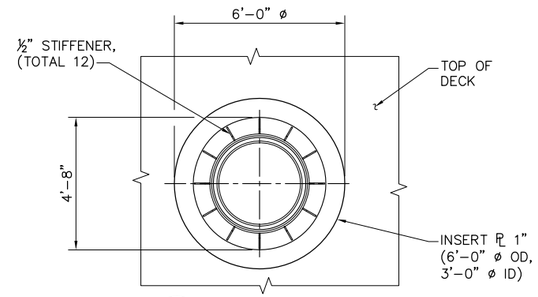

A – SECTION
SCALE: 3/8" = 1'-0"

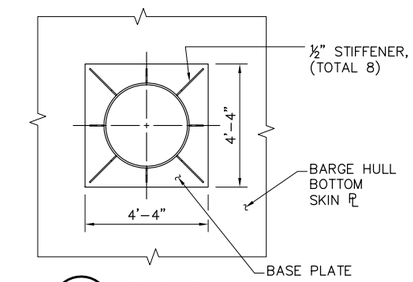

B – SECTION
SCALE: 3/8" = 1'-0"
C49

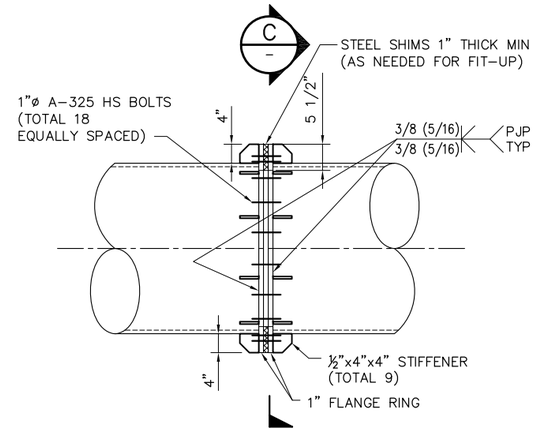

2 C45 FRAME CONNECTION
SCALE: 3/4" = 1'-0"
C49

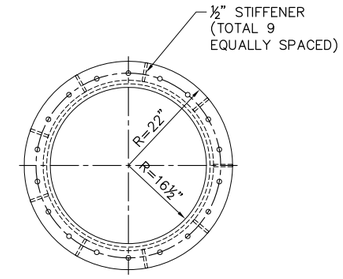

C – SECTION
SCALE: 3/4" = 1'-0"

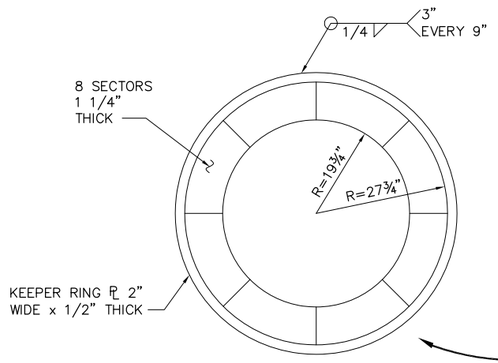

UHMW HDPE
THRUST BEARING

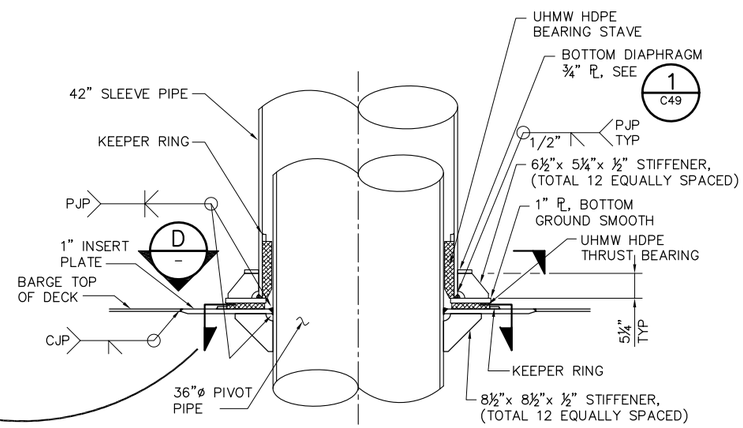

3 – DETAIL
SCALE: 3/4" = 1'-0"

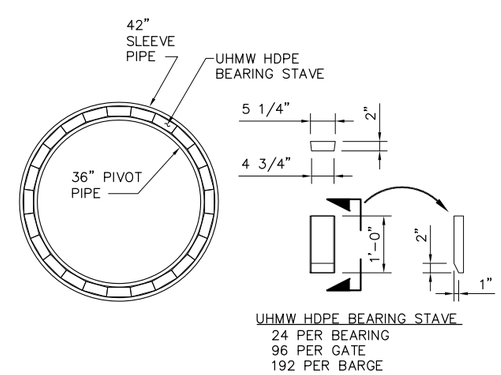

UHMW HDPE BEARING STAVE
24 PER BEARING
96 PER GATE
192 PER BARGE

D – SECTION
SCALE: 3/4" = 1'-0"

NOTES:

1. ALL STIFFENER WELDS SHALL BE SYMMETRICAL ¼" MIN. FILLET WELDS U.N.O.

2'-0" 0'-0" 1'-0" 2'-0"
SCALE: 3/4"=1'-0"

4'-0" 0'-0" 2'-0" 4'-0"
SCALE: 3/8"=1'-0"

100% SUBMITTAL REVISION 1

IF SHEET IS LESS THAN 22" x 34" IT IS A REDUCED PRINT – SCALE REDUCED ACCORDINGLY.

REVISION	DESCRIPTION	BY	DATE

San Luis & Delta-Mendota Water Authority
842 6th Street, Suite 7
PO Box 2157
Los Banos, California 93635

Moffatt & Nichol
2001 N. Main Street, Suite 360
Walnut Creek, California 94596
(925) 944-5411

DSGN	DR	CHK
JMB/CBS	AB/EP	TDB
JOB NO. 6097-03	SUBMITTED BY RMR	

2-GATES FISH PROTECTION DEMONSTRATION PROJECT

CONNECTION SLOUGH
GATE STRUCTURAL DETAILS
SHEET 3

DATE 10/02/09
SHEET 52 OF 78
C48

P:\6097-03 SWC GATE DESIGN\CADD\DWG\609703-C48.DWG 9/29/2009 2:48 PM

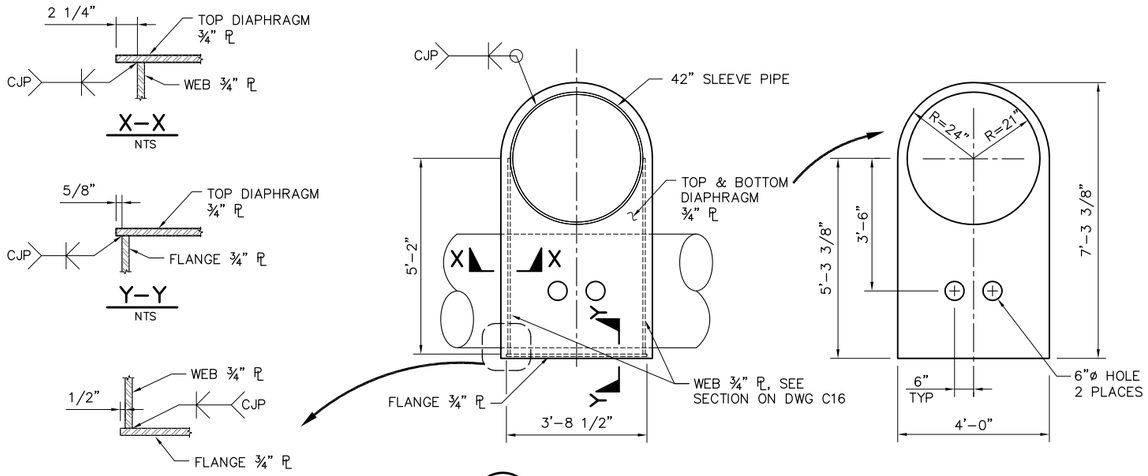

1 / C44 **SLEEVE CONNECTION DETAIL**
SCALE: 1/2" = 1'–0"

C48

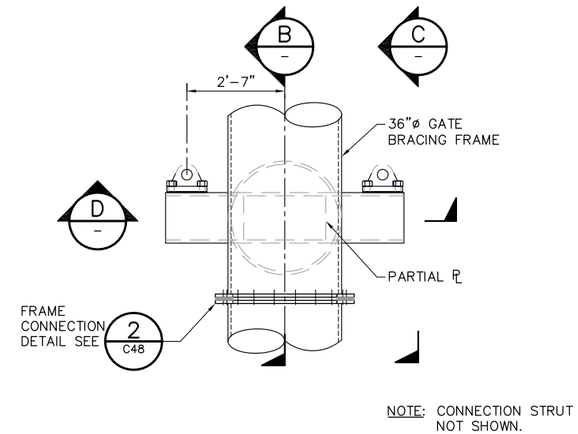

NOTE: CONNECTION STRUT NOT SHOWN.

3 / C45 **PLAN – ACTUATOR CONNECTION DETAIL**
SCALE: 1/2" = 1'–0"

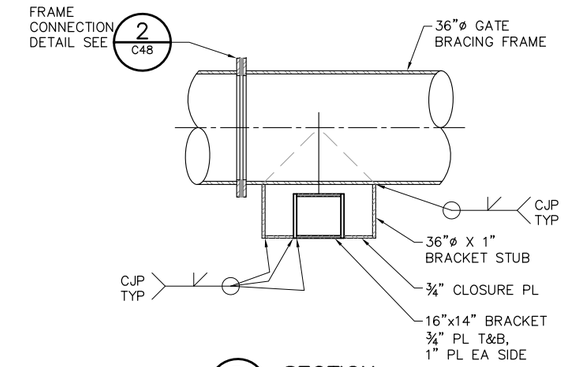

B / – **SECTION**
SCALE: 1/2" = 1'–0"

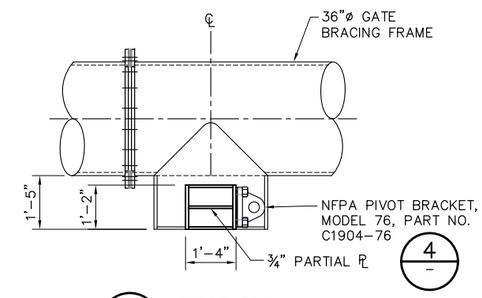

C / – **SECTION**
SCALE: 1/2" = 1'–0"

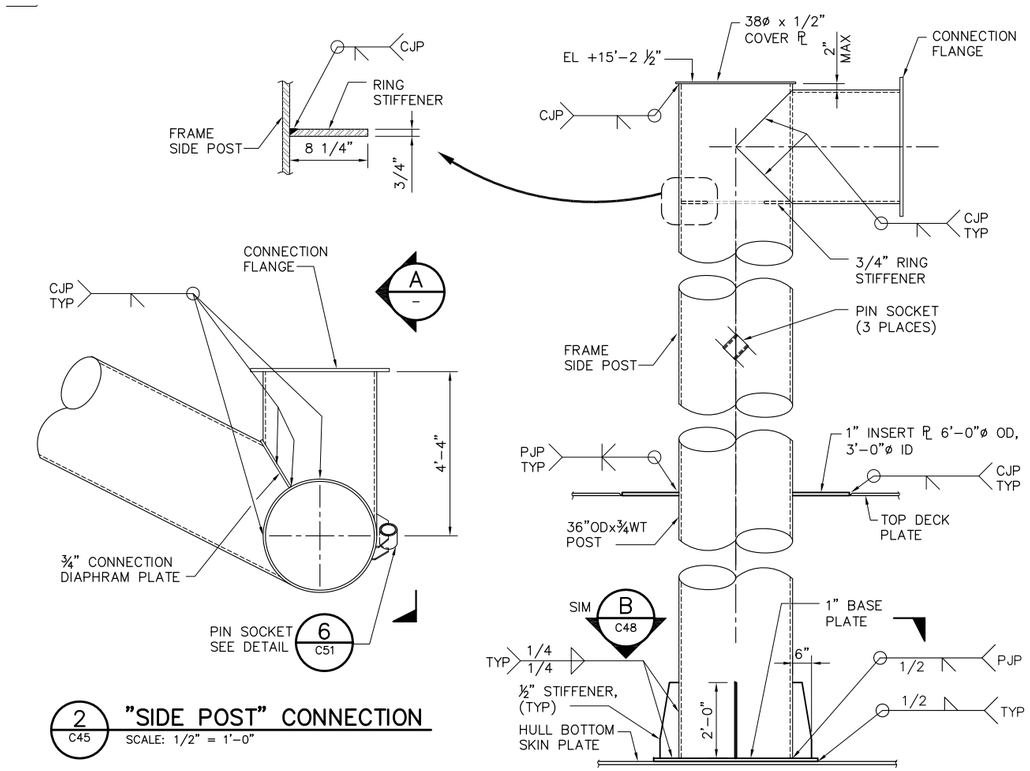

2 / C45 **"SIDE POST" CONNECTION**
SCALE: 1/2" = 1'–0"

A / – **ELEVATION**
SCALE: 1/2" = 1'–0"

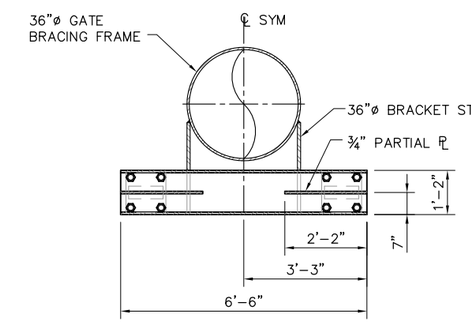

D / – **SECTION**
SCALE: 1/2" = 1'–0"

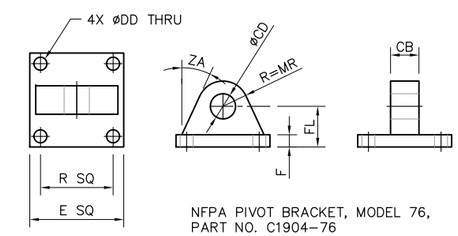

NFPA PIVOT BRACKET, MODEL 76, PART NO. C1904–76

CB	CD	DD	E	F	FL	MR	R	ZA
4.000	3.500	1.812	12.625	1.688	5.688	3.500	9.625	25°

4 / – **DETAIL**
SCALE: 1"=1'–0"

2'–0" 0'–0" 2'–0" 4'–0"
SCALE: 1/2"=1'–0"

100% SUBMITTAL REVISION 1

IF SHEET IS LESS THAN 22" x 34" IT IS A REDUCED PRINT – SCALE REDUCED ACCORDINGLY.

REVISION	DESCRIPTION	BY	DATE

San Luis & Delta–Mendota Water Authority
842 6th Street, Suite 7
PO Box 2157
Los Banos, California 93635

Moffatt & Nichol
2001 N. Main Street, Suite 360
Walnut Creek, California 94596
(925) 944–5411

DSGN	DR	CHK
JMB	AB/EP	CBS
JOB NO. 6097–03	SUBMITTED BY RMR	

2–GATES FISH PROTECTION DEMONSTRATION PROJECT

CONNECTION SLOUGH GATE STRUCTURAL DETAILS, SHEET 4

DATE 10/02/09

SHEET 53 OF 78

C49

P:\6097–03 SWC GATE DESIGN\CADD\DWG\609703–C49.DWG 9/29/2009 3:05 PM

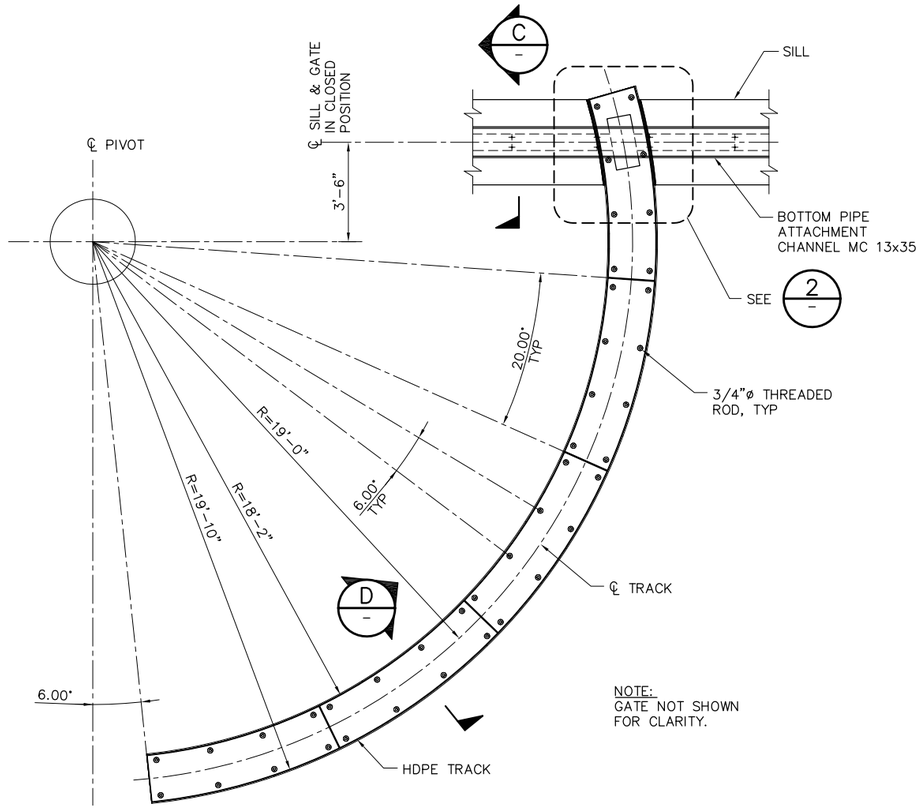

1 TRACK DETAIL
SCALE: 3/8" = 1'-0"

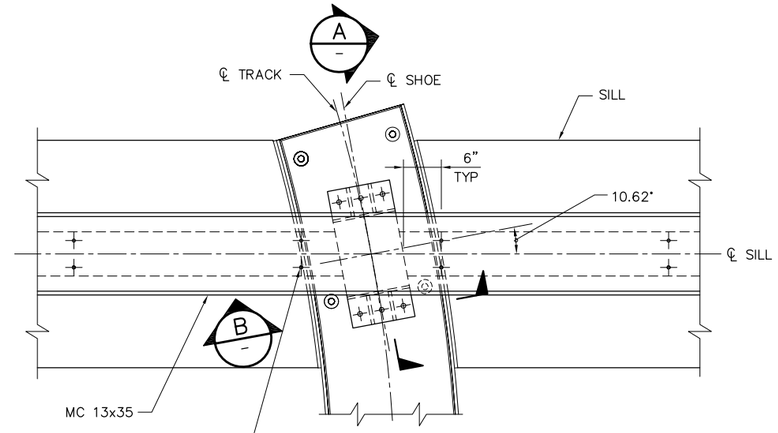

2 DETAIL
SCALE: 1" = 1'-0"

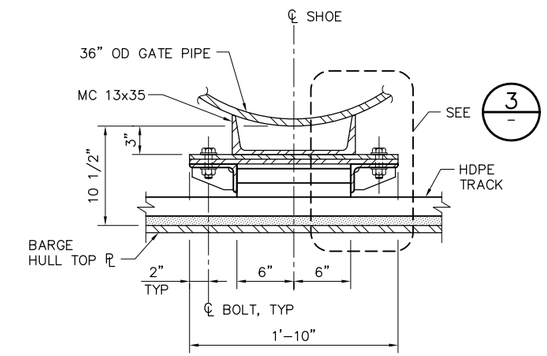

A SECTION
SCALE: 1 1/2" = 1'-0"

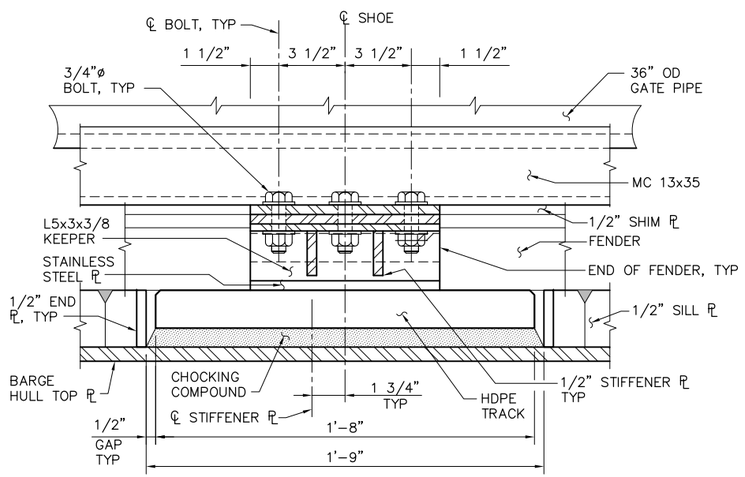

B SECTION
SCALE: 3" = 1'-0"

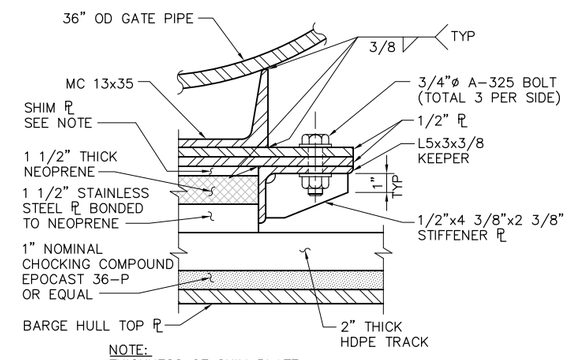

NOTE:
THICKNESS OF SHIM PLATE TO PROVIDE ~1 KIP PRELOAD.

3 DETAIL
SCALE: 3" = 1'-0"

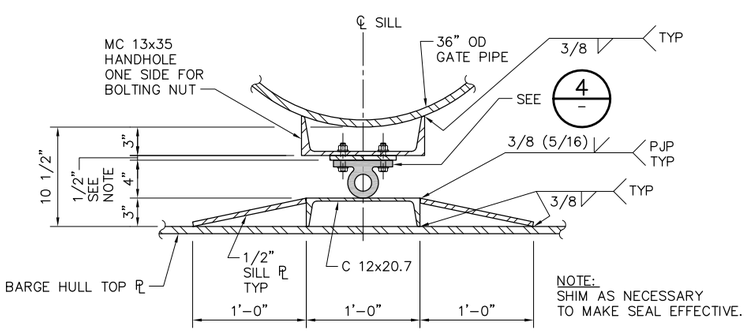

C SECTION
SCALE: 1 1/2" = 1'-0"

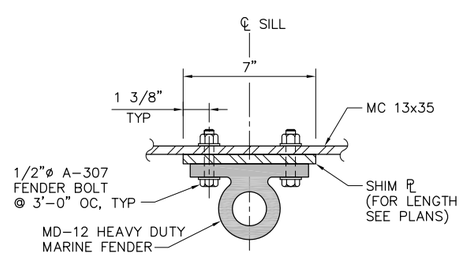

4 DETAIL
SCALE: 3" = 1'-0"

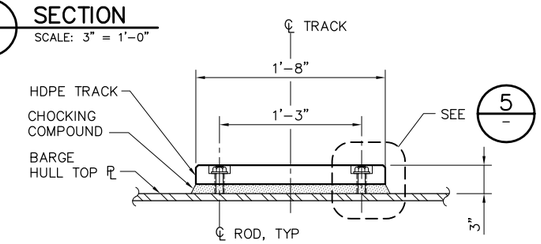

D SECTION
SCALE: 1 1/2" = 1'-0"

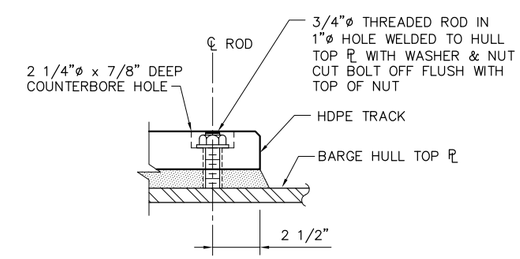

5 DETAIL
SCALE: 3" = 1'-0"

4'-0" 0'-0" 2'-0" 4'-0"
SCALE: 3/8"=1'-0"

100% SUBMITTAL REVISION 1

IF SHEET IS LESS THAN 22" x 34" IT IS A REDUCED PRINT – SCALE REDUCED ACCORDINGLY.

REVISION	DESCRIPTION	BY	DATE

San Luis & Delta-Mendota Water Authority
842 6th Street, Suite 7
PO Box 2157
Los Banos, California 93635

Moffatt & Nichol
2001 N. Main Street, Suite 360
Walnut Creek, California 94596
(925) 944-5411

DSGN	DR	CHK
JMB	EP/AB	CBS
JOB NO. 6097-03	SUBMITTED BY RMR	

2-GATES FISH PROTECTION DEMONSTRATION PROJECT

CONNECTION SLOUGH GATE STRUCTURAL DETAILS, SHEET 5

DATE 10/02/09

SHEET 54 OF 78

C50

P:\6097-03 SWC GATE DESIGN\CADD\DWG\609703-C50.DWG 9/1/2009 10:14 AM

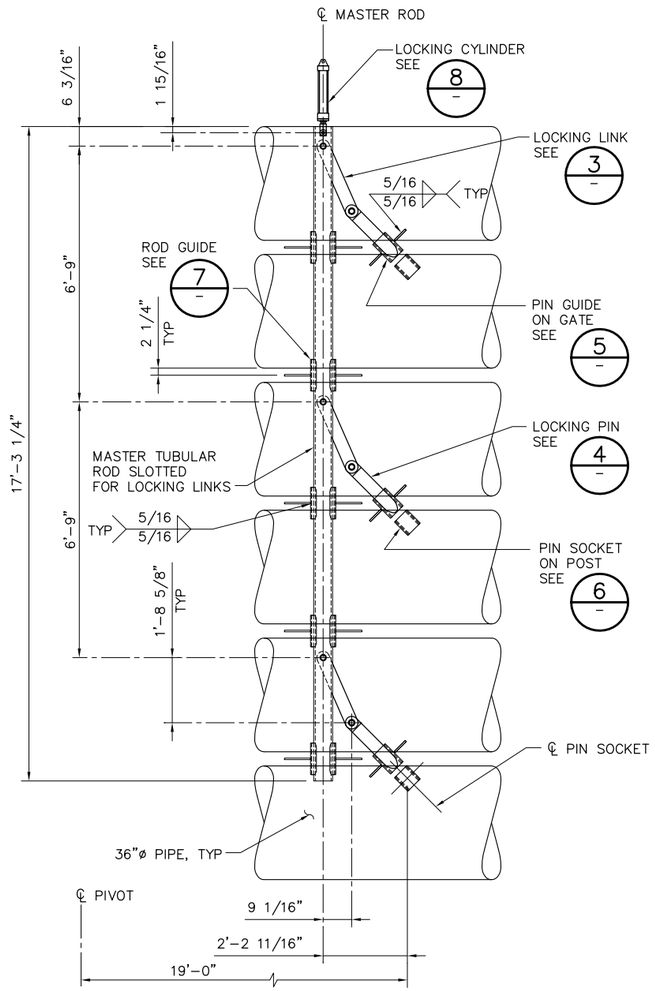

1 C43 GATE OPEN LOCK (UNLOCKED) DETAIL
SCALE: 1/2" = 1'-0"

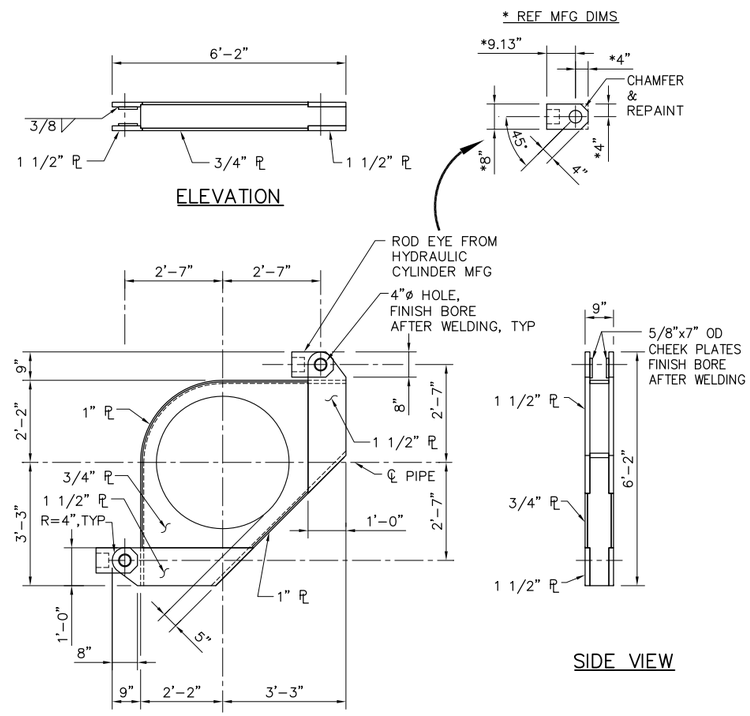

2 C44 GATE YOKE DETAIL
SCALE: 1/2" = 1'-0"

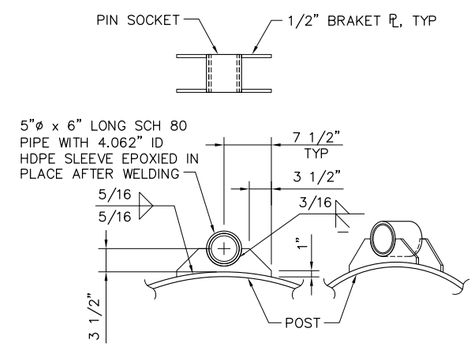

6 – PIN SOCKET DETAIL
SCALE: 1" = 1'-0"

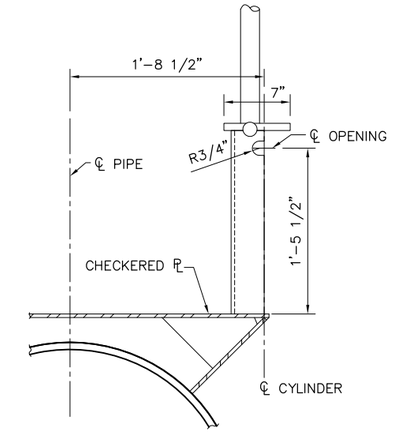

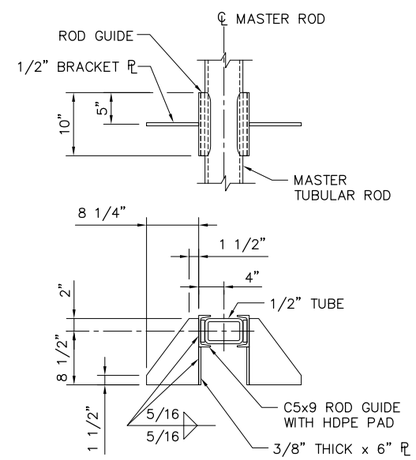

7 – ROD GUIDE DETAIL
SCALE: 1" = 1'-0"

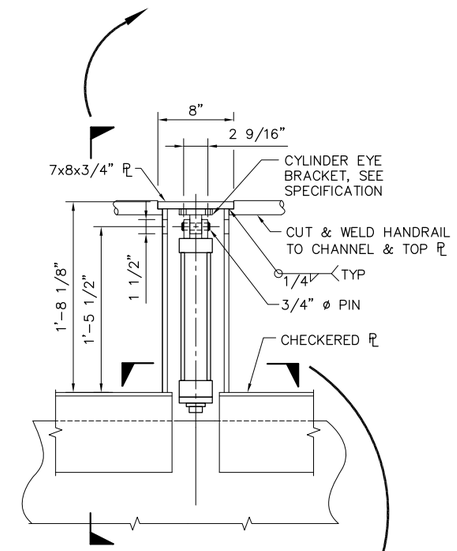

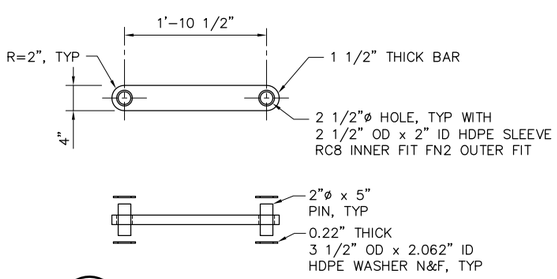

3 – LOCKING LINK DETAIL
SCALE: 1" = 1'-0"

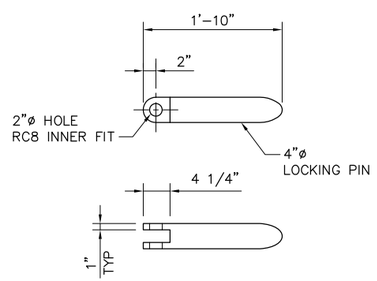

4 – LOCKING PIN DETAIL
SCALE: 1" = 1'-0"

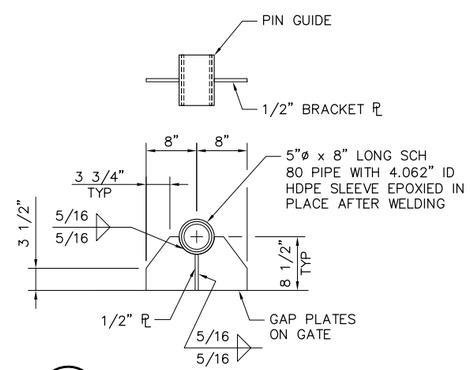

5 – PIN GUIDE DETAIL
SCALE: 1" = 1'-0"

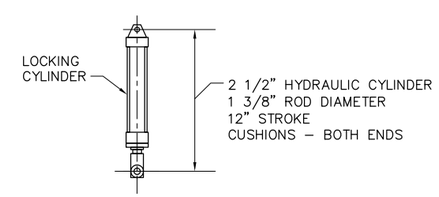

8 – LOCKING CYLINDER DETAIL
SCALE: 1" = 1'-0"

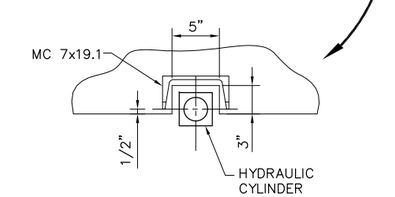

9 C43 CYLINDER SUPPORT DETAIL
SCALE: 1 1/2" = 1'-0"

1'-0" 0'-0" 1'-0" 2'-0"
SCALE: 1"=1'-0"

100% SUBMITTAL REVISION 1

IF SHEET IS LESS THAN 22" x 34" IT IS A REDUCED PRINT – SCALE REDUCED ACCORDINGLY.

REVISION	DESCRIPTION	BY	DATE

San Luis & Delta-Mendota Water Authority
842 6th Street, Suite 7
PO Box 2157
Los Banos, California 93635

Moffatt & Nichol
2001 N. Main Street, Suite 360
Walnut Creek, California 94596
(925) 944-5411

DSGN	DR	CHK
CBS	CBS/EP	TDB
JOB NO. 6097-03	SUBMITTED BY RMR	

2-GATES FISH PROTECTION DEMONSTRATION PROJECT

CONNECTION SLOUGH GATE MECHANICAL DETAILS SHEET 1

DATE 10/02/09

SHEET 55 OF 78

C51

P:\6097-03 SWC GATE DESIGN\CADD\DWG\609703-C51.DWG 10/1/2009 2:58 PM

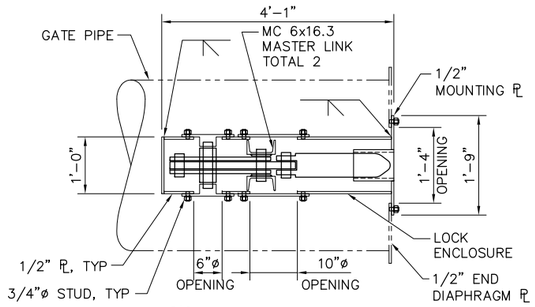

A — SECTION
SCALE: 3/4" = 1'-0"

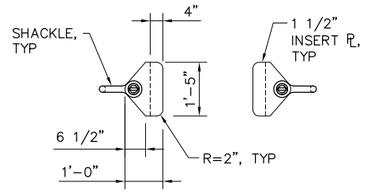

B — SECTION
SCALE: 1/2" = 1'-0"

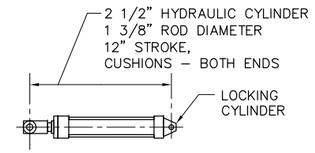

3 — LOCKING CYLINDER DETAIL
SCALE: 1" = 1'-0"

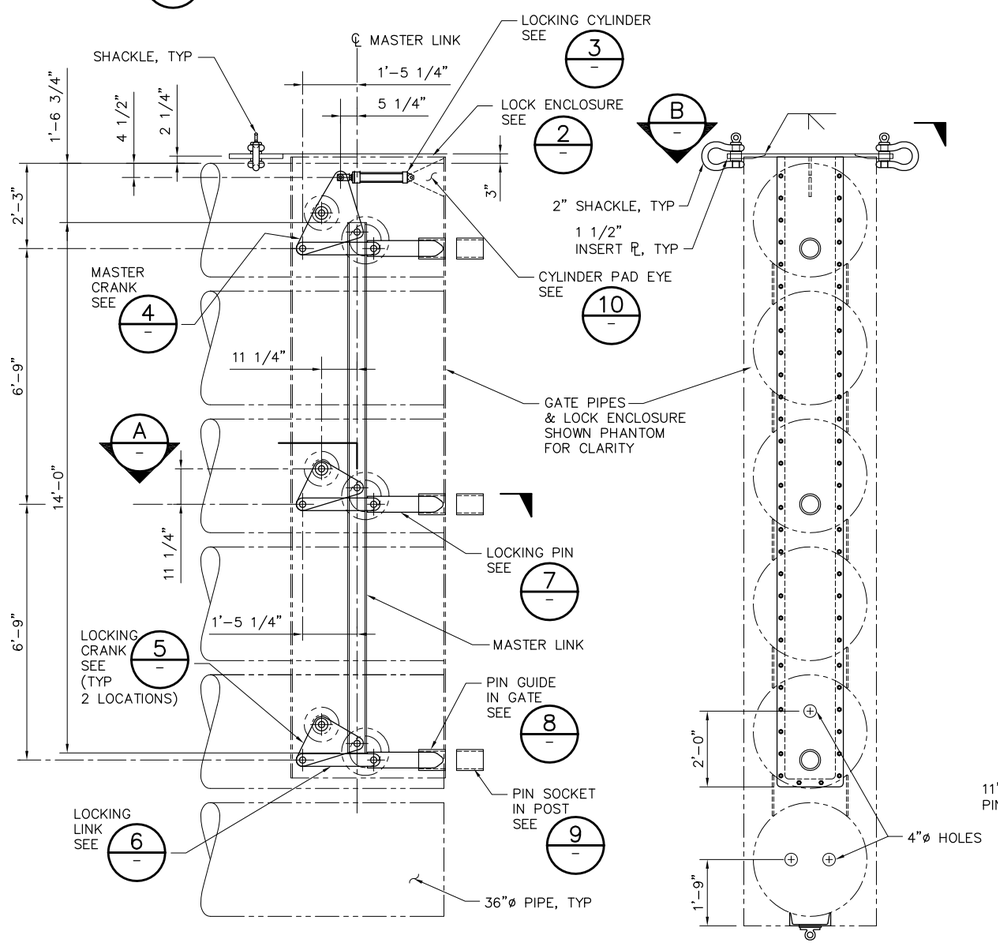

1 C43 — GATE CLOSED LOCK (UNLOCKED) DETAIL
SCALE: 1/2" = 1'-0"

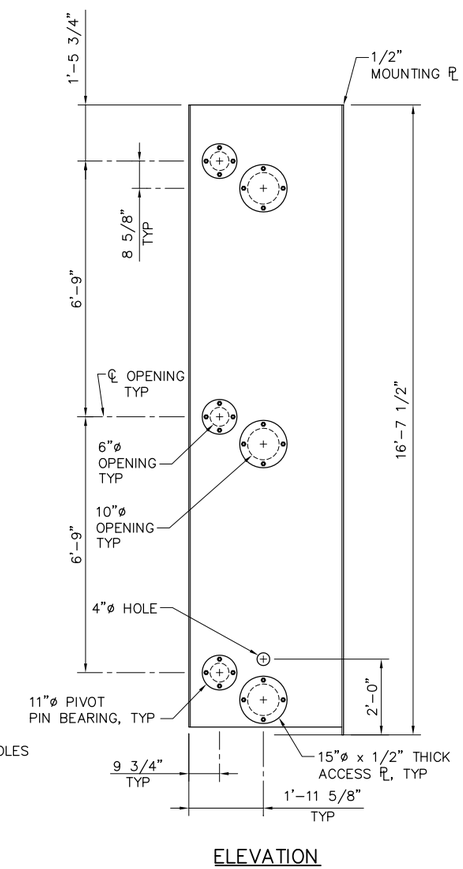

2 — LOCK ENCLOSURE DETAIL
SCALE: 1/2" = 1'-0"

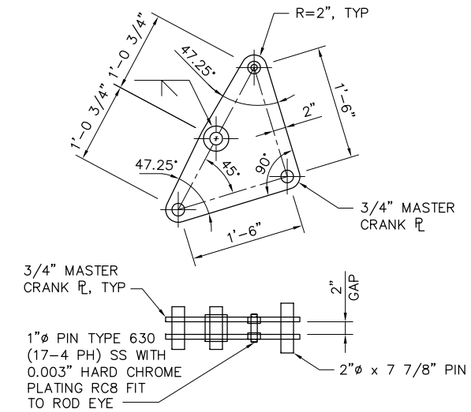

4 — MASTER CRANK DETAIL
SCALE: 1" = 1'-0"

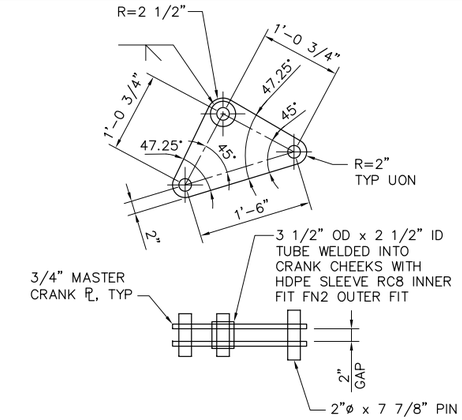

5 — LOCKING CRANK DETAIL
SCALE: 1" = 1'-0"

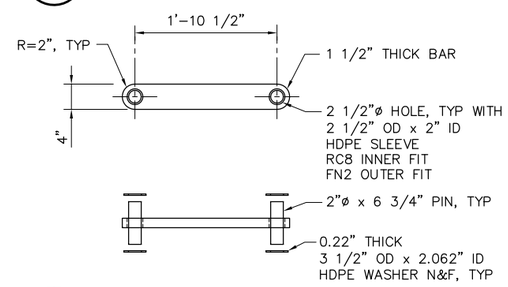

6 — LOCKING LINK DETAIL
SCALE: 1" = 1'-0"

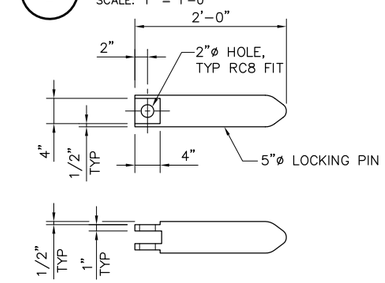

7 — LOCKING PIN DETAIL
SCALE: 1" = 1'-0"

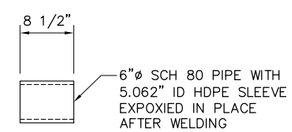

8 — PIN GUIDE DETAIL
SCALE: 1" = 1'-0"

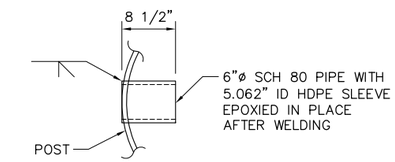

9 — PIN SOCKET DETAIL
SCALE: 1" = 1'-0"

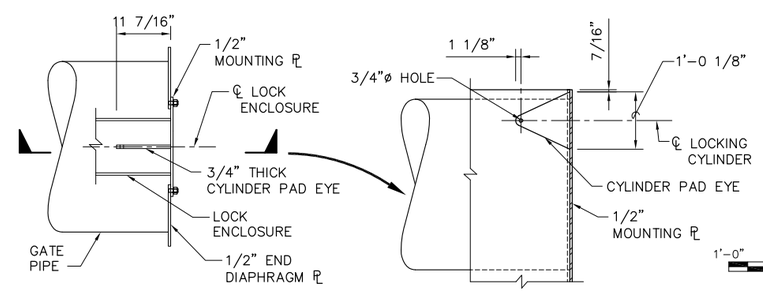

NOTE:
LOCKING CYLINDER
NOT SHOWN
FOR CLARITY.

10 — CYLINDER PAD EYE DETAIL
SCALE: 3/4" = 1'-0"

1'-0" 0'-0" 1'-0" 2'-0"
SCALE: 1"=1'-0"

100% SUBMITTAL REVISION 1

IF SHEET IS LESS THAN 22" x 34"
IT IS A REDUCED PRINT –
SCALE REDUCED ACCORDINGLY.

REVISION	DESCRIPTION	BY	DATE

San Luis & Delta-Mendota Water Authority
842 6th Street, Suite 7
PO Box 2157
Los Banos, California 93635

Moffatt & Nichol
2001 N. Main Street, Suite 360
Walnut Creek, California 94596
(925) 944-5411

DSGN	DR	CHK
CBS	EP/AB	TDB
JOB NO. 6097-03	SUBMITTED BY RMR	

2-GATES FISH PROTECTION
DEMONSTRATION PROJECT

CONNECTION SLOUGH
GATE MECHANICAL DETAILS
SHEET 2

DATE 10/02/09
SHEET 56 OF 78

C52

P:\6097-03 SWC GATE DESIGN\CADD\DWG\609703-C52.DWG 9/29/2009 3:29 PM

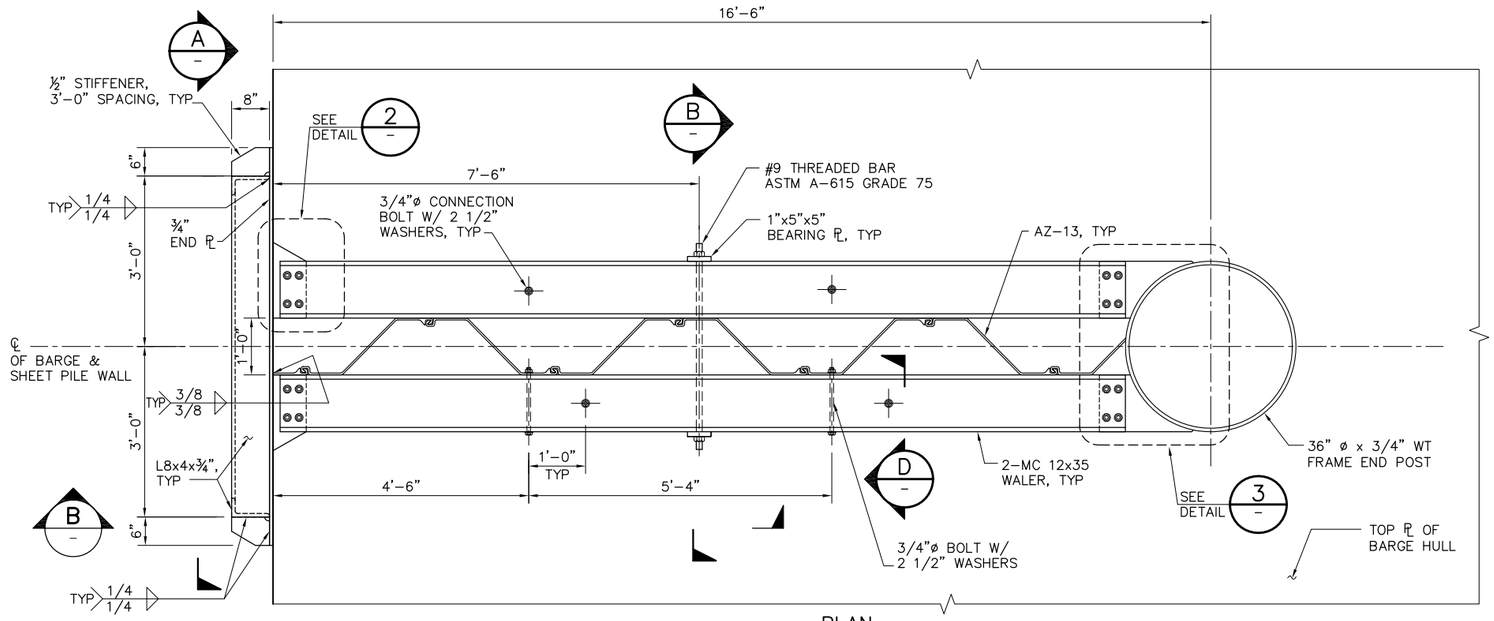

PLAN

1 DETAIL
C45 SCALE: 3/4" = 1'-0"

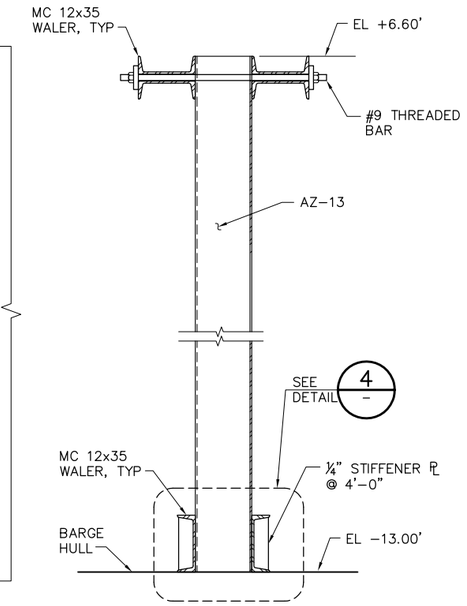

C SECTION
SCALE: 3/4"=1'-0"

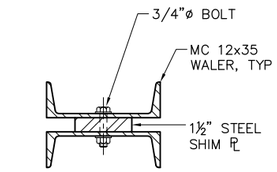

D SECTION
SCALE: 1 1/2"=1'-0"

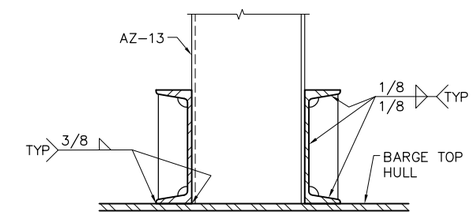

4 DETAIL
SCALE: 1 1/2"=1'-0"

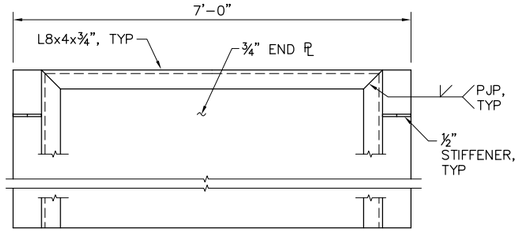

A SECTION
SCALE: 3/4" = 1'-0"

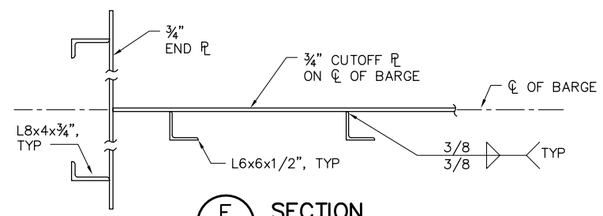

F SECTION
SCALE: 3/4" = 1'-0"

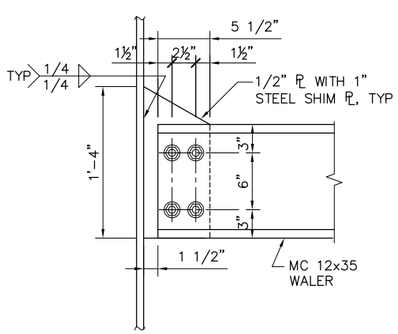

2 DETAIL
SCALE: 1 1/2"=1'-0"

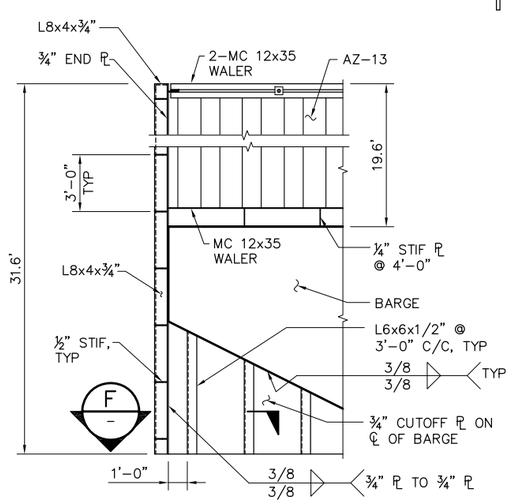

B SECTION
SCALE: 1/4" = 1'-0"

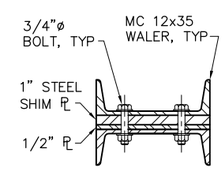

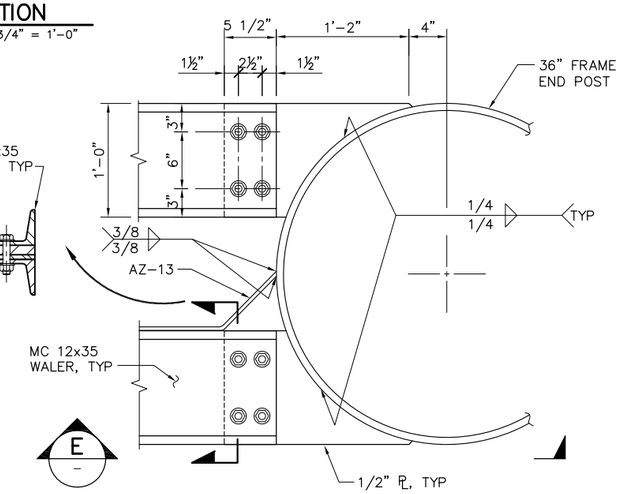

3 DETAIL
SCALE: 1 1/2"=1'-0"

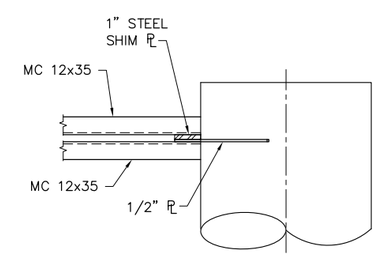

E SECTION
SCALE: 3/4"=1'-0"

1'-0" 0'-0" 6" 1'-0"
SCALE: 1 1/2"=1'-0"

2'-0" 0'-0" 1'-0" 2'-0"
SCALE: 3/4"=1'-0"

NOTE:

ALL BOLTS ARE ASTM A-307 U.O.N.

100% SUBMITTAL REVISION 1

IF SHEET IS LESS THAN 22" x 34" IT IS A REDUCED PRINT – SCALE REDUCED ACCORDINGLY.

REVISION	DESCRIPTION	BY	DATE

San Luis & Delta-Mendota Water Authority
842 6th Street, Suite 7
PO Box 2157
Los Banos, California 93635

Moffatt & Nichol
2001 N. Main Street, Suite 360
Walnut Creek, California 94596
(925) 944-5411

DSGN	DR	CHK
JMB	AB	TDB
JOB NO. 6097-03	SUBMITTED BY RMR	

2-GATES FISH PROTECTION DEMONSTRATION PROJECT

CONNECTION SLOUGH END WALL SCANTLINGS

DATE 10/02/09

SHEET 57 OF 78

C53

P:\6097-03 SWC GATE DESIGN\CADD\DWG\609703-C53.DWG 9/1/2009 10:15 AM

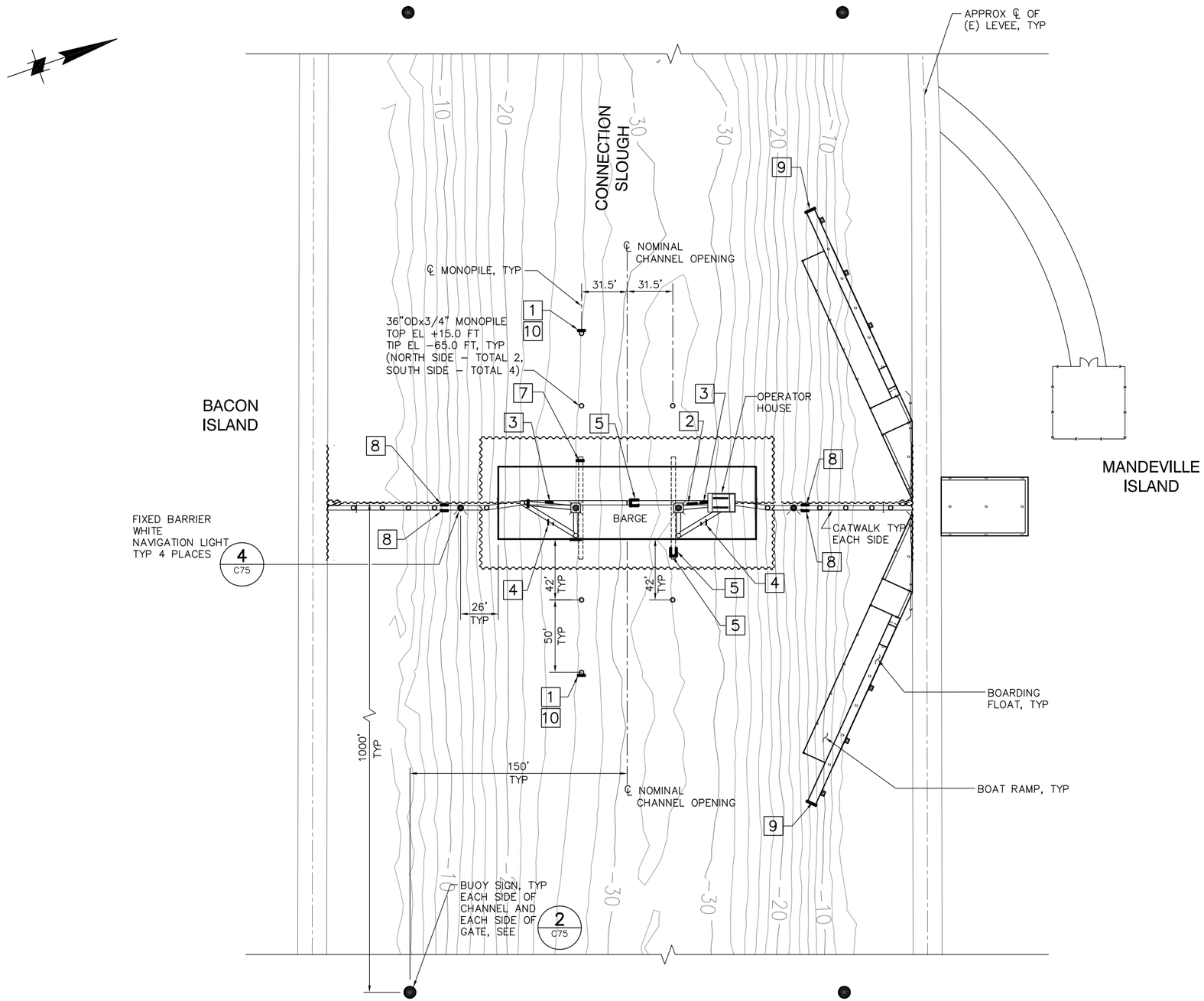

PLAN

SCALE: 1"= 40'

40' 0' 40' 80'

SCALE: 1"=40'

SIGN DATA

LOCATION	SIGN	SIGN DETAIL	SIGN MOUNTING DETAIL
1	GATE 5 MPH	1 / C75	1 / C76
2	GATE WARNING SIGN	5 / C75	5 / C76
3	DANGER SIGN	7 / C75	5 / C76
4	DANGER SIGN	7 / C75	3 / C76
5	GATE POSITION SIGNS "GATES OPEN" "GATES CLOSED"	6 / C75	2 / C74
6	GATE WARNING SIGN	5 / C75	2 / C76
7	GATE POSITION SIGN "GATES OPEN"	6 / C75	4 / C76
8	STAY BACK WARNING SIGN	9 / C75	5 / C76
9	BOAT RAMP DOCK SIGN	3 / C75	6 / C76
10	GATE OPENING SIGN	10 / C75	1 / C76

100% SUBMITTAL REVISION 1

IF SHEET IS LESS THAN 22" x 34" IT IS A REDUCED PRINT – SCALE REDUCED ACCORDINGLY.

REVISION	DESCRIPTION	BY	DATE

San Luis & Delta–Mendota Water Authority
842 6th Street, Suite 7
PO Box 2157
Los Banos, California 93635

Moffatt & Nichol
2001 N. Main Street, Suite 360
Walnut Creek, California 94596
(925) 944–5411

DSGN	DR	CHK
RBD	AB	TDB
JOB NO. 6097–03	SUBMITTED BY RMR	

2–GATES FISH PROTECTION DEMONSTRATION PROJECT

CONNECTION SLOUGH AIDS TO NAVIGATION PLAN

DATE 10/02/09

SHEET 58 OF 78

C54

P:\6097–03 SWC GATE DESIGN\CADD\DWG\609703–C54.DWG 9/29/2009 3:41 PM

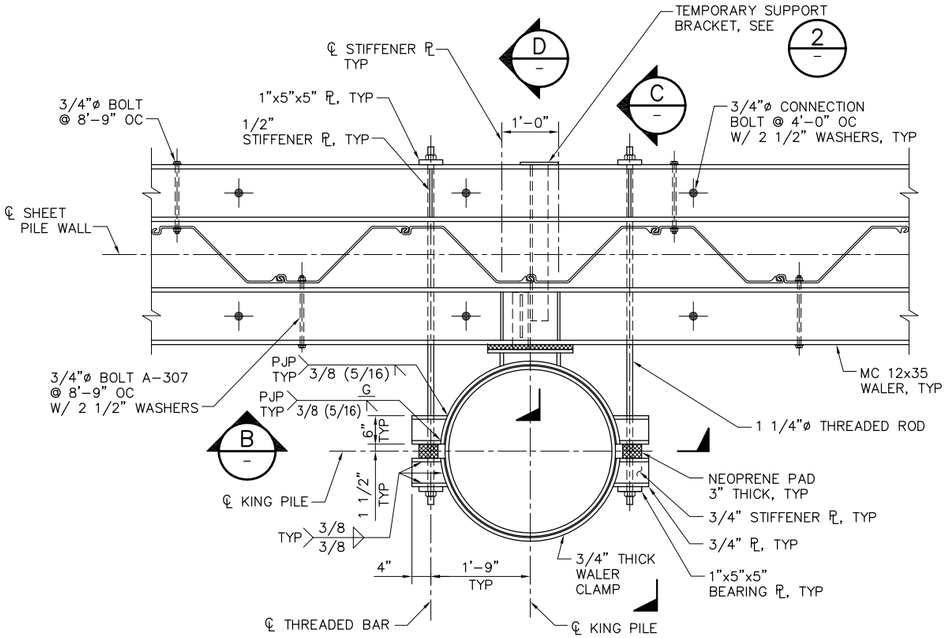

PLAN

1 DETAIL C35 — SCALE: 3/4" = 1'-0"

C5, C6

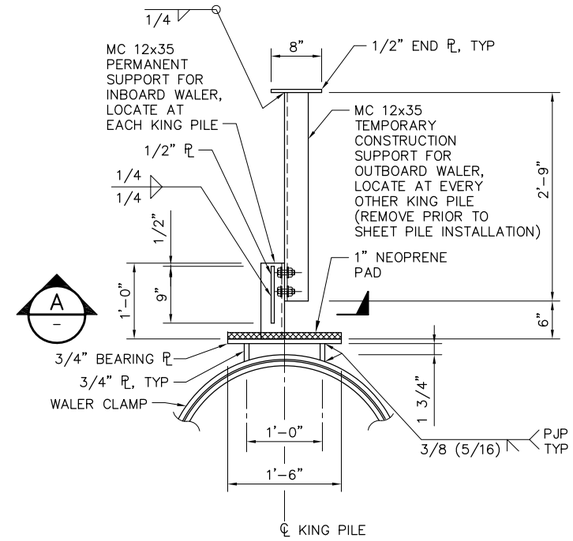

PLAN

2 DETAIL — SCALE: 1" = 1'-0"

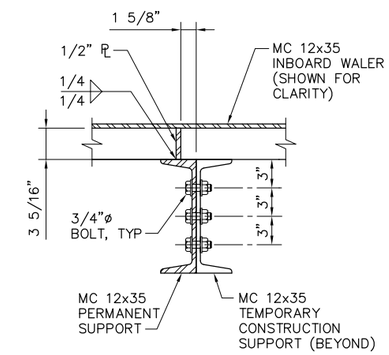

A SECTION — SCALE: 1 1/2" = 1'-0"

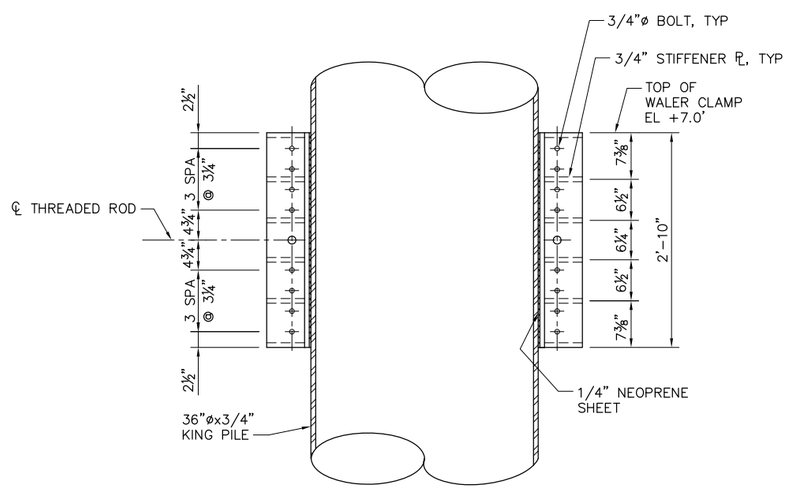

B SECTION — SCALE: 1" = 1'-0"

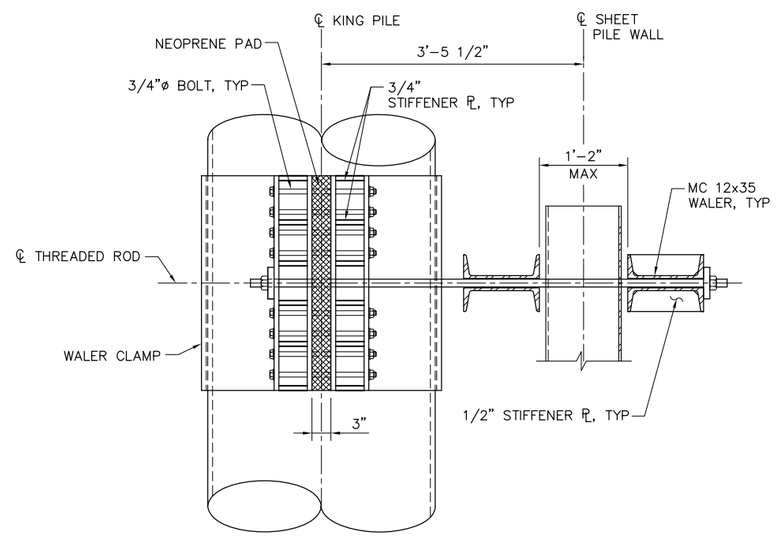

C SECTION — SCALE: 1" = 1'-0"

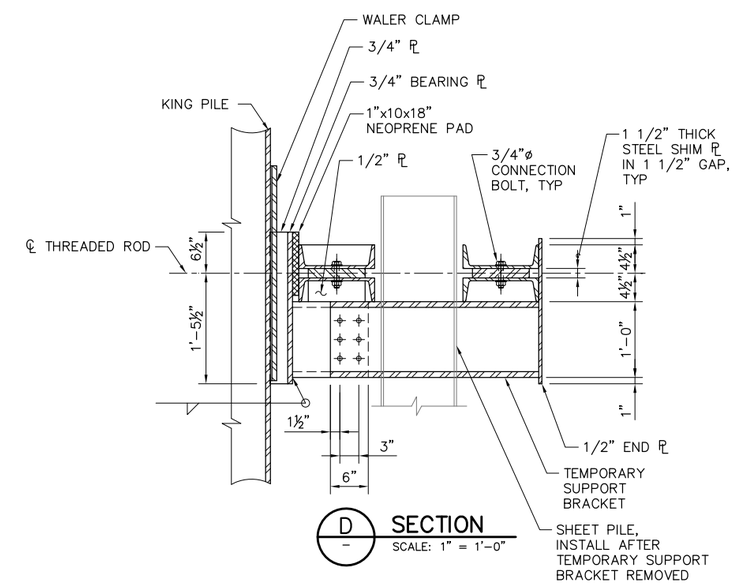

D SECTION — SCALE: 1" = 1'-0"

2'-0" 0'-0" 1'-0" 2'-0"
SCALE: 3/4"=1'-0"

100% SUBMITTAL REVISION 1

IF SHEET IS LESS THAN 22" x 34" IT IS A REDUCED PRINT – SCALE REDUCED ACCORDINGLY.

REVISION	DESCRIPTION	BY	DATE

San Luis & Delta-Mendota Water Authority
842 6th Street, Suite 7
PO Box 2157
Los Banos, California 93635

Moffatt & Nichol
2001 N. Main Street, Suite 360
Walnut Creek, California 94596
(925) 944-5411

DSGN	DR	CHK
JMB	EP	TDB
JOB NO. 6097-03	SUBMITTED BY RMR	

2-GATES FISH PROTECTION DEMONSTRATION PROJECT

SHEET PILE WALL DETAILS SHEET 1

DATE 10/02/09

SHEET 59 OF 78

C63

P:\6097-03 SWC GATE DESIGN\CADD\DWG\609703-C63.DWG 9/29/2009 3:42 PM

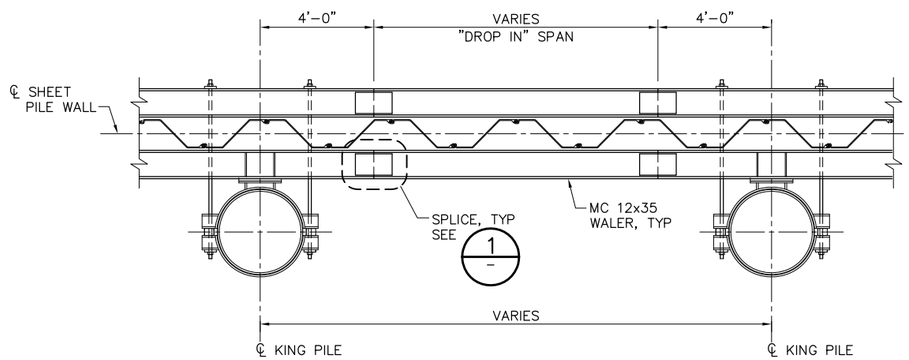

PLAN

TYPICAL WALER SPLICE DETAIL (SEE NOTE 1)

SCALE: 3/8"= 1'-0"

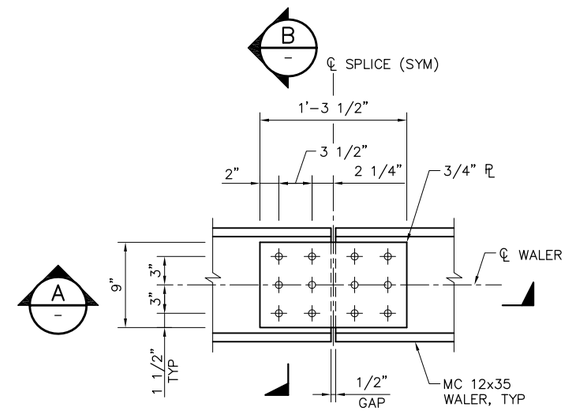

PLAN

1 DETAIL

SCALE: 1 1/2" = 1'-0"

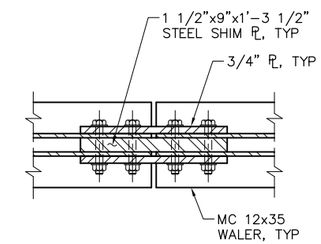

A SECTION

SCALE: 1 1/2" = 1'-0"

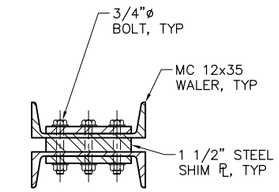

B SECTION

SCALE: 1 1/2" = 1'-0"

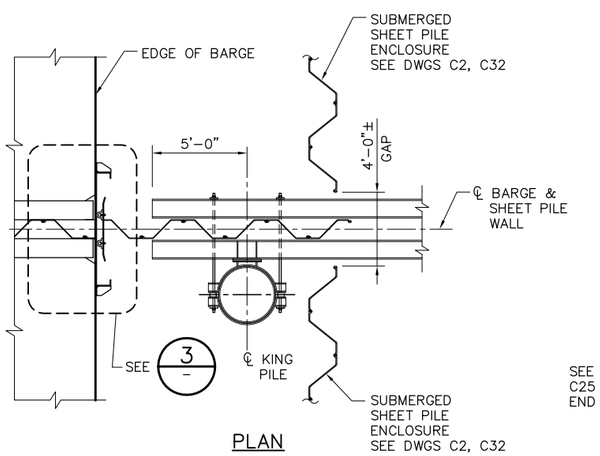

PLAN

2 DETAIL

C5, C6 C35

SCALE: 1/4" = 1'-0"

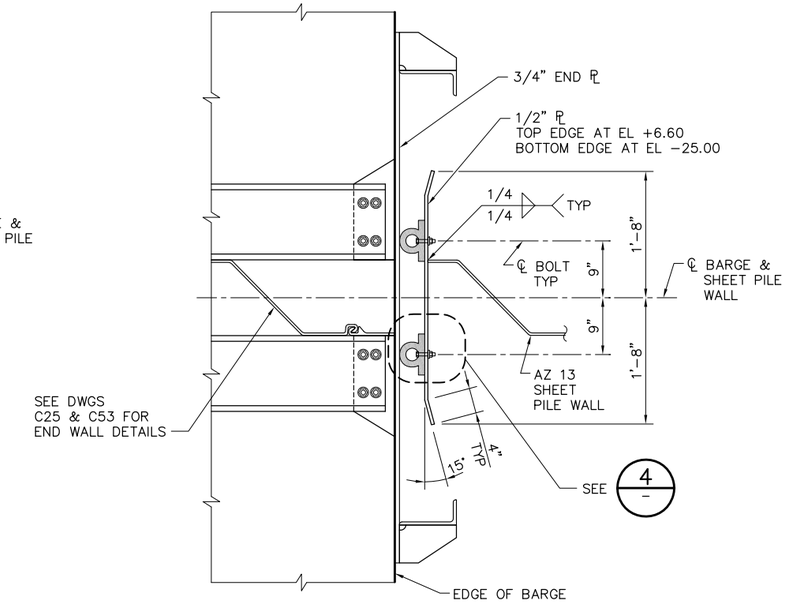

3 DETAIL

SCALE: 1" = 1'-0"

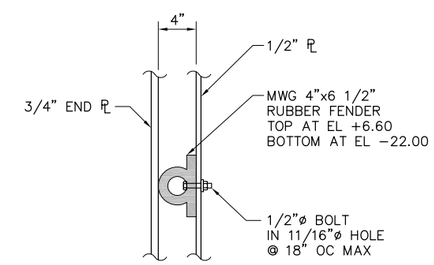

4 DETAIL

SCALE: 1 1/2" = 1'-0"

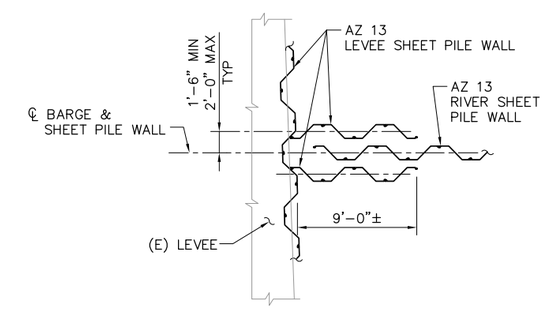

5 DETAIL

C5, C6 C35

SCALE: 3/16" = 1'-0"

NOTES:

1. LOCATE WALER SPLICES AS REQUIRED.

2'-0" 0'-0" 1'-0" 2'-0"

SCALE: 3/4"=1'-0"

100% SUBMITTAL REVISION 1

IF SHEET IS LESS THAN 22" x 34" IT IS A REDUCED PRINT – SCALE REDUCED ACCORDINGLY.

REVISION	DESCRIPTION	BY	DATE

San Luis & Delta-Mendota Water Authority
842 6th Street, Suite 7
PO Box 2157
Los Banos, California 93635

Moffatt & Nichol
2001 N. Main Street, Suite 360
Walnut Creek, California 94596
(925) 944-5411

DSGN	DR	CHK
JMB	EP	TDB
JOB NO. 6097-03	SUBMITTED BY RMR	

2-GATES FISH PROTECTION DEMONSTRATION PROJECT

SHEET PILE WALL DETAILS SHEET 2

DATE 10/02/09

SHEET 60 OF 78

C64

P:\6097-03 SWC GATE DESIGN\CADD\DWG\609703-C64.DWG 10/1/2009 2:11 PM

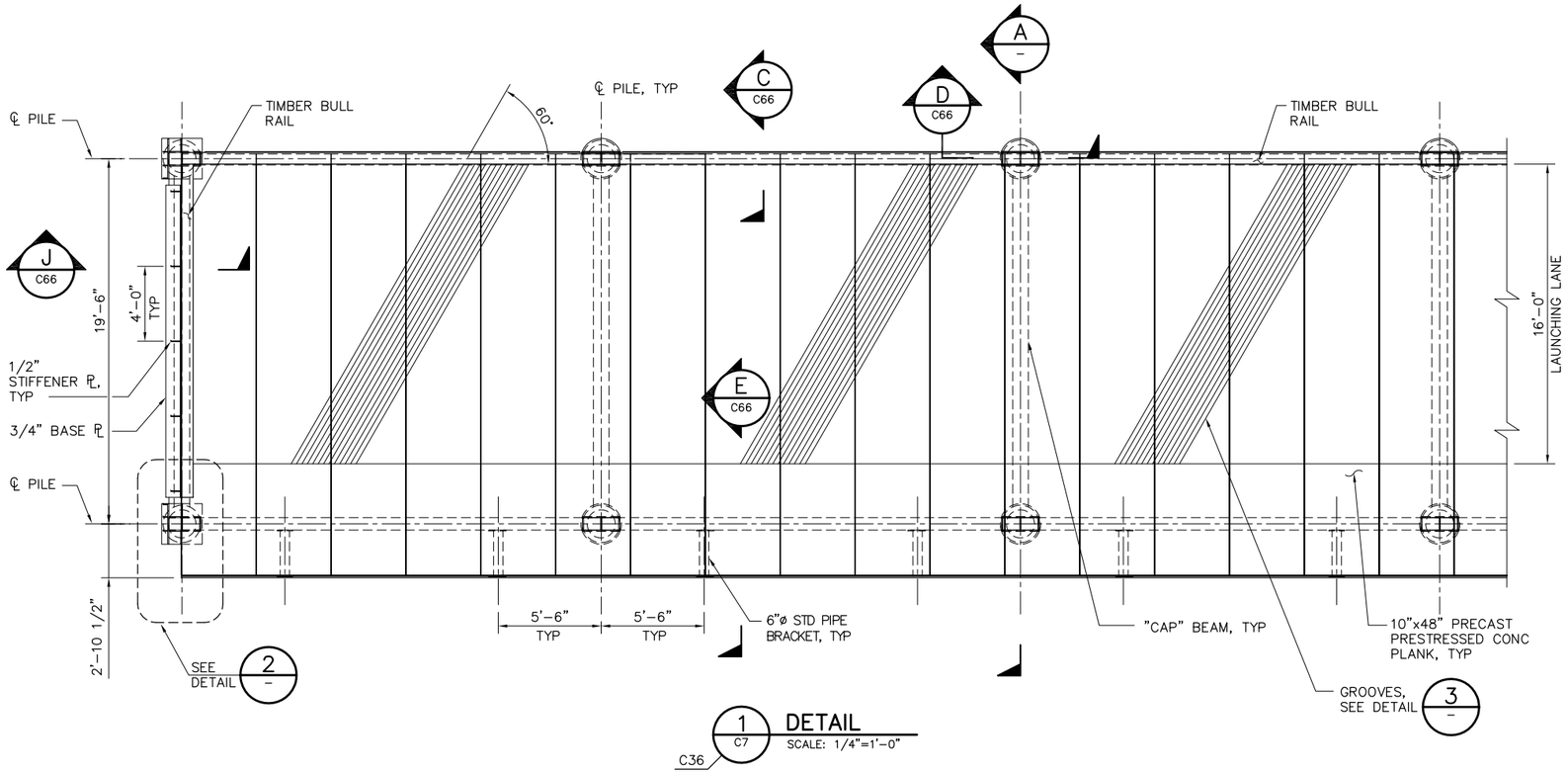

1 DETAIL
SCALE: 1/4"=1'-0"
C36

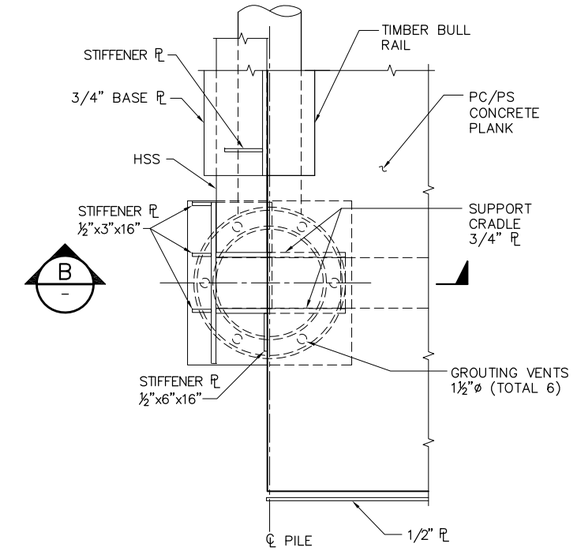

2 DETAIL
SCALE: 1" = 1'-0"

WELDING NOTE:

ALL WELDS TO BE DOUBLE FILLET 1/4" UON.

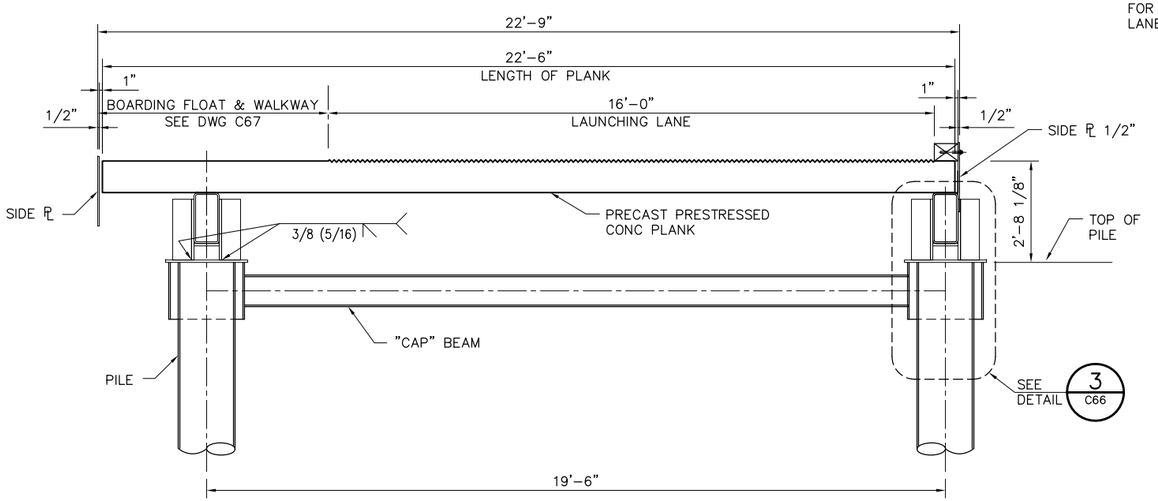

A SECTION
SCALE: 1/2"=1'-0"

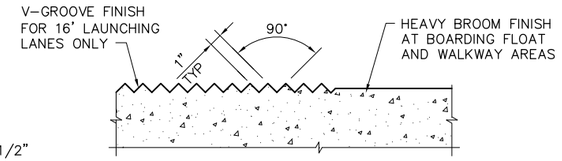

3 TYPICAL PRECAST PANEL SURFACE FINISH
NTS

NOTE:

V-GROOVES ARE TO BE 1"x1" AND ALIGNED AT 60° TO THE LONGITUDINAL AXIS OF THE BOAT RAMP. UNDER NO CIRCUMSTANCES SHALL THE GROOVES EXCEED 1 1/2".

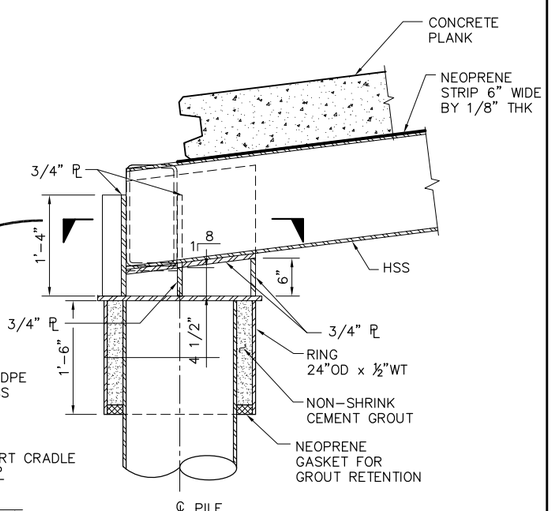

B SECTION
SCALE: 1" = 1'-0"

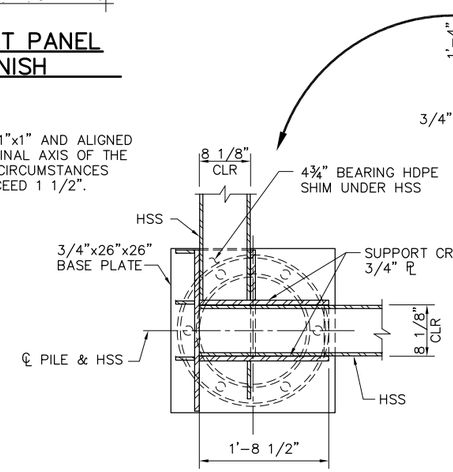

4'-0" 0'-0" 4'-0" 8'-0"
SCALE: 1/4"=1'-0"

2'-0" 0'-0" 2'-0" 4'-0"
SCALE: 1/2"=1'-0"

1'-0" 0'-0" 1'-0" 2'-0"
SCALE: 1"=1'-0"

100% SUBMITTAL REVISION 1

IF SHEET IS LESS THAN 22" x 34" IT IS A REDUCED PRINT – SCALE REDUCED ACCORDINGLY.

REVISION	DESCRIPTION	BY	DATE

San Luis & Delta-Mendota Water Authority
842 6th Street, Suite 7
PO Box 2157
Los Banos, California 93635

Moffatt & Nichol
2001 N. Main Street, Suite 360
Walnut Creek, California 94596
(925) 944-5411

DSGN	DR	CHK
JMB	AB	TDB
JOB NO. 6097-03	SUBMITTED BY RMR	

2-GATES FISH PROTECTION DEMONSTRATION PROJECT

BOAT RAMP PLAN AND SECTIONS

DATE 10/02/09

SHEET 61 OF 78

C65

P:\6097-03 SWC GATE DESIGN\CADD\DWG\609703-C65.DWG 9/1/2009 10:36 AM

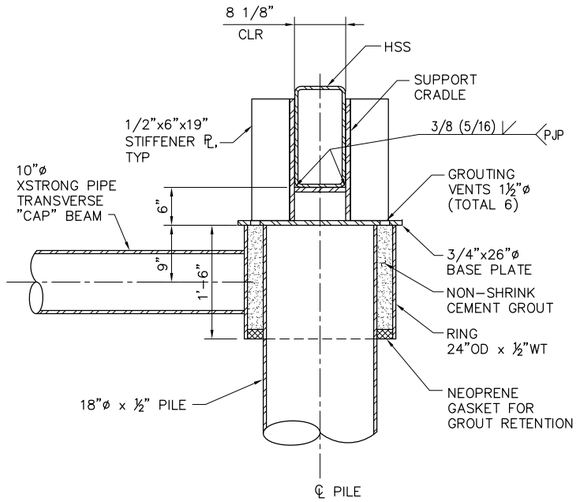

3 / C65 **DETAIL**
SCALE: 1" = 1'-0"

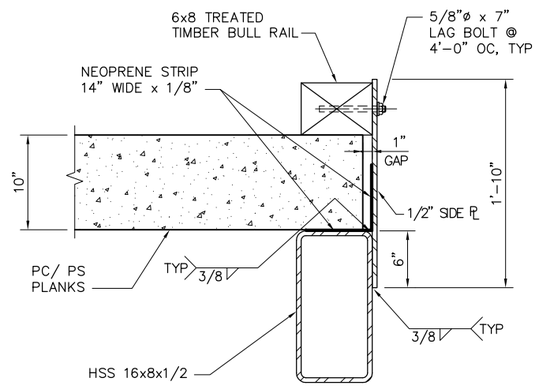

C / C65 **SECTION**
SCALE: 1 1/2" = 1'-0"

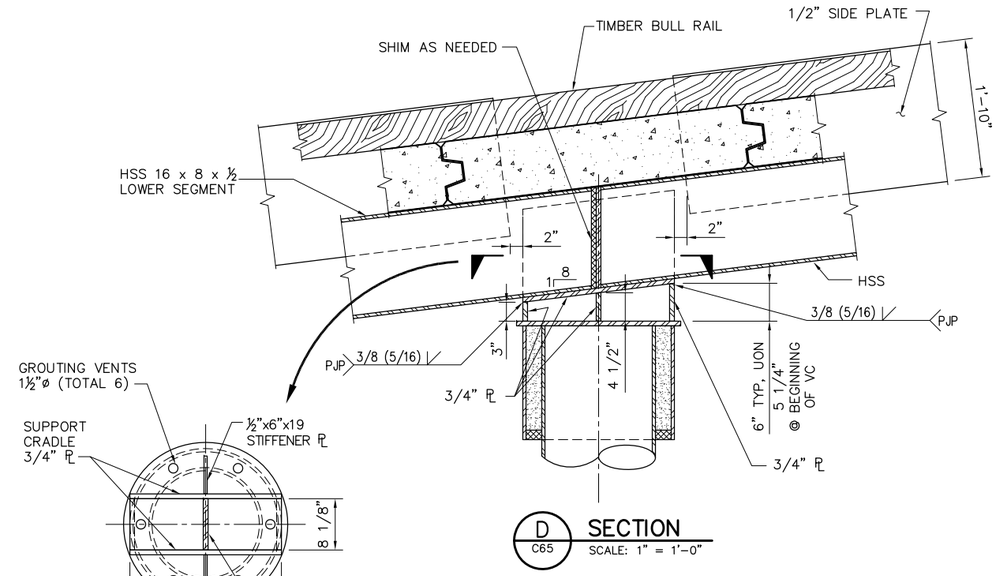

D / C65 **SECTION**
SCALE: 1" = 1'-0"

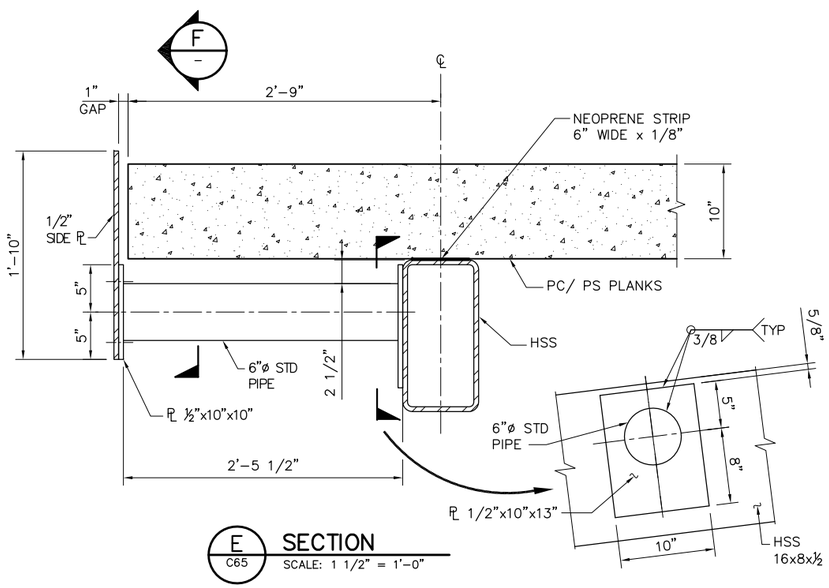

E / C65 **SECTION**
SCALE: 1 1/2" = 1'-0"

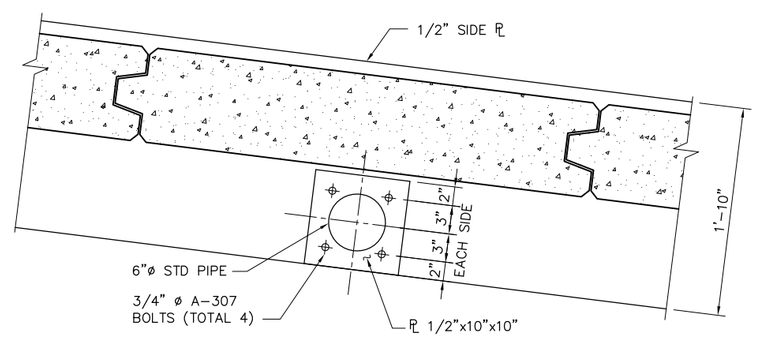

F / – **SECTION**
SCALE: 1 1/2" = 1'-0"

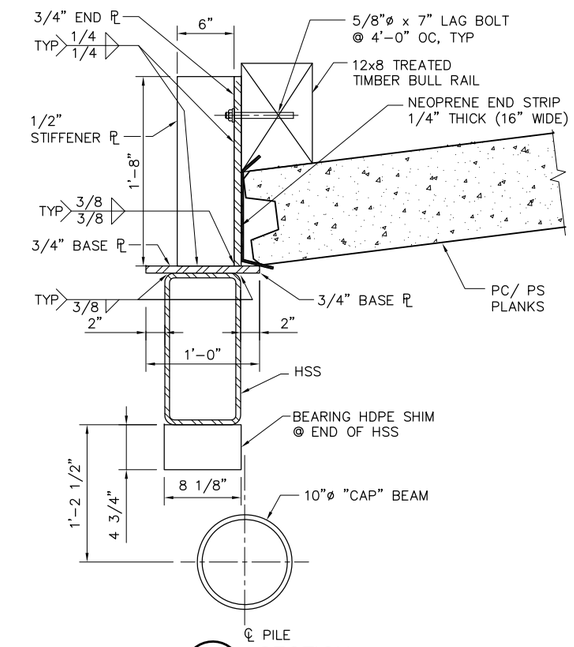

J / 65 **SECTION**
SCALE: 1 1/2" = 1'-0"

NOTE:
NEOPRENE STRIPS SHALL BE PREGLUED TO CONCRETE PLANKS.

1'-0" 0'-0" 1'-0" 2'-0"
SCALE: 1"=1'-0"

1'-0" 0'-0" 6" 1'-0"
SCALE: 1 1/2"=1'-0"

100% SUBMITTAL REVISION 1

IF SHEET IS LESS THAN 22" x 34" IT IS A REDUCED PRINT – SCALE REDUCED ACCORDINGLY.

REVISION	DESCRIPTION	BY	DATE

San Luis & Delta-Mendota Water Authority
842 6th Street, Suite 7
PO Box 2157
Los Banos, California 93635

Moffatt & Nichol
2001 N. Main Street, Suite 360
Walnut Creek, California 94596
(925) 944-5411

DSGN	DR	CHK
JMB	AB	TDB
JOB NO. 6097-03	SUBMITTED BY RMR	

2-GATES FISH PROTECTION DEMONSTRATION PROJECT

BOAT RAMP DETAILS

DATE 10/02/09

SHEET 62 OF 78

C66

P:\6097-03 SWC GATE DESIGN\CADD\DWG\609703-C66.DWG 9/1/2009 10:38 AM

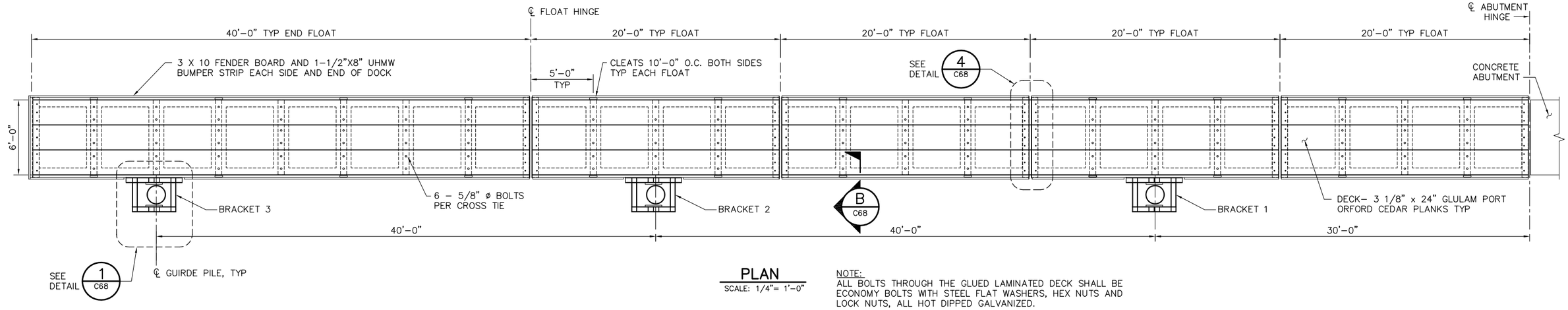

PLAN

SCALE: 1/4"= 1'–0"

NOTE:
ALL BOLTS THROUGH THE GLUED LAMINATED DECK SHALL BE ECONOMY BOLTS WITH STEEL FLAT WASHERS, HEX NUTS AND LOCK NUTS, ALL HOT DIPPED GALVANIZED.

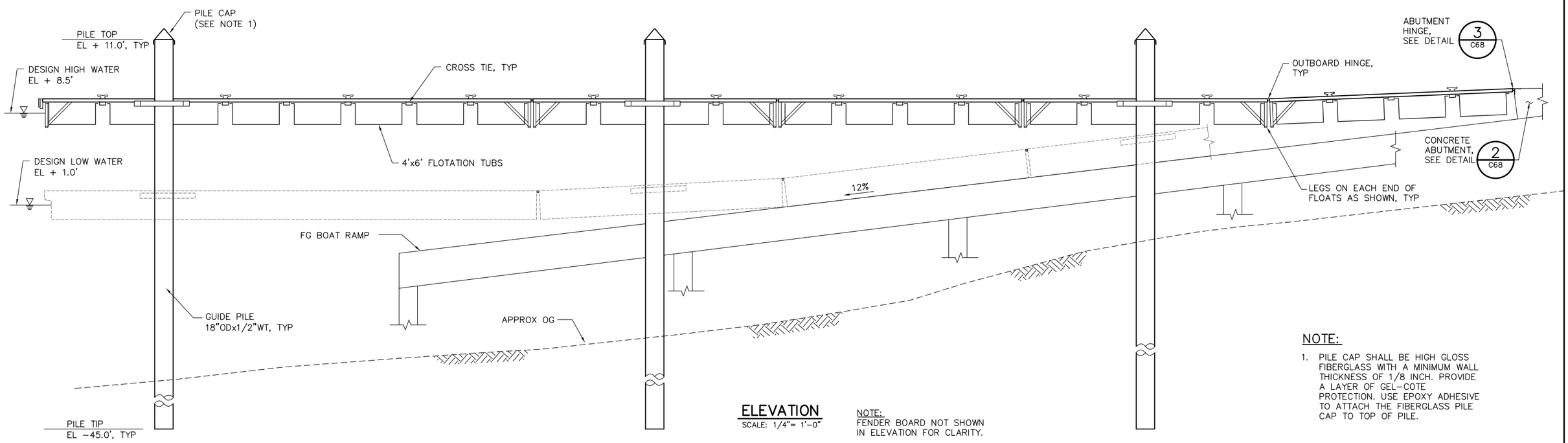

ELEVATION

SCALE: 1/4"= 1'–0"

NOTE:
FENDER BOARD NOT SHOWN IN ELEVATION FOR CLARITY.

NOTE:

1. PILE CAP SHALL BE HIGH GLOSS FIBERGLASS WITH A MINIMUM WALL THICKNESS OF 1/8 INCH. PROVIDE A LAYER OF GEL–COTE PROTECTION. USE EPOXY ADHESIVE TO ATTACH THE FIBERGLASS PILE CAP TO TOP OF PILE.

4'–0" 0'–0" 4'–0" 8'–0"
SCALE: 1/4"=1'–0"

100% SUBMITTAL REVISION 1

IF SHEET IS LESS THAN 22" x 34" IT IS A REDUCED PRINT – SCALE REDUCED ACCORDINGLY.

REVISION	DESCRIPTION	BY	DATE

San Luis & Delta–Mendota Water Authority
842 6th Street, Suite 7
PO Box 2157
Los Banos, California 93635

Moffatt & Nichol
2001 N. Main Street, Suite 360
Walnut Creek, California 94596
(925) 944–5411

DSGN	DR	CHK
JMB	AB	TDB
JOB NO. 6097–03	SUBMITTED BY RMR	

2–GATES FISH PROTECTION DEMONSTRATION PROJECT

BOARDING FLOAT PLAN AND ELEVATION

DATE 10/02/09

SHEET 63 OF 78

C67

P:\6097–03 SWC GATE DESIGN\CADD\DWG\609703–C67.DWG 9/1/2009 10:38 AM

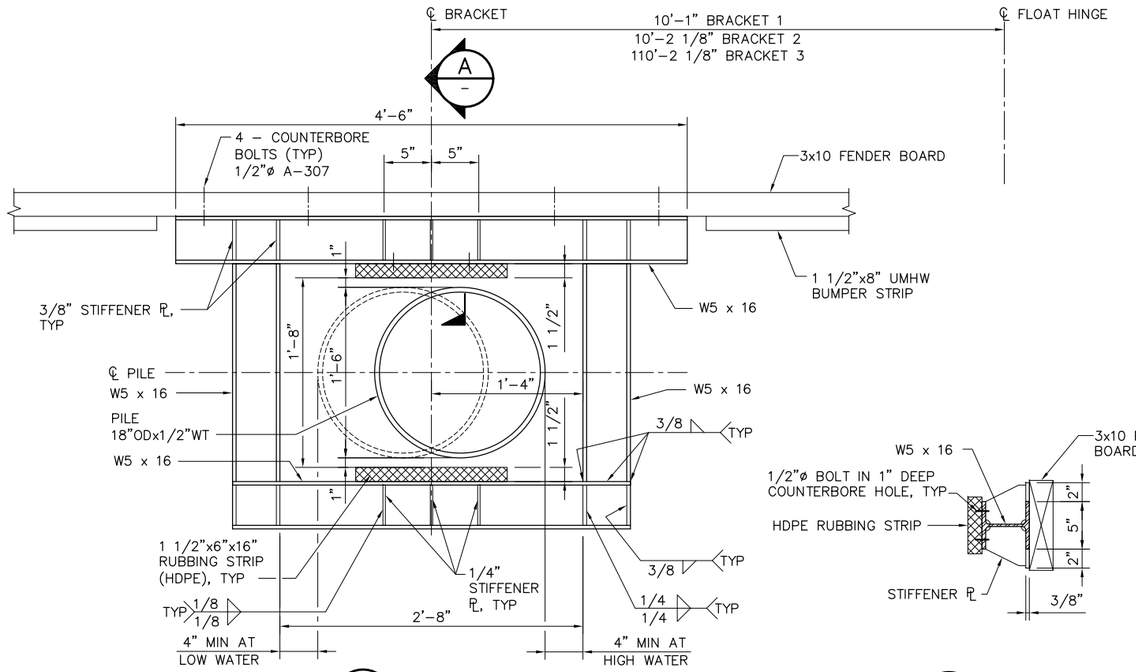

1 C67 DETAIL
SCALE: 1 1/2" = 1'-0"

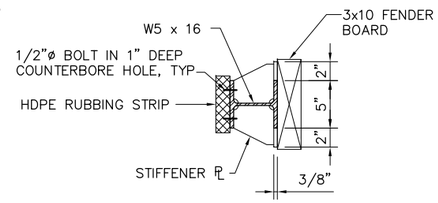

A – SECTION
SCALE: 1 1/2" = 1'-0"

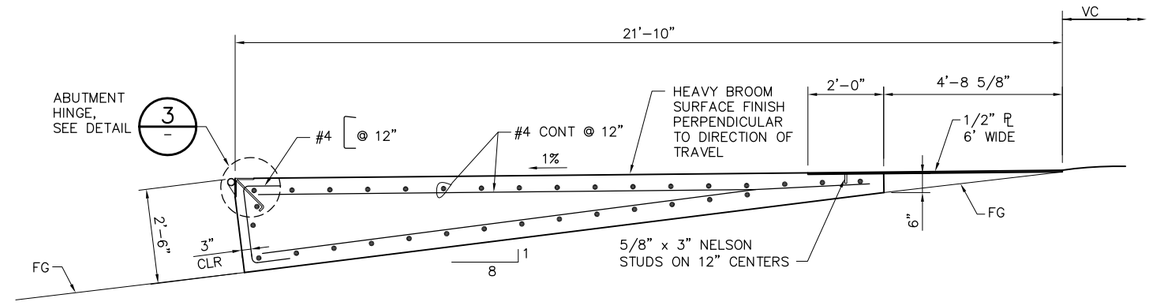

2 C67 ABUTMENT DETAIL
SCALE: 1/2" = 1'-0"

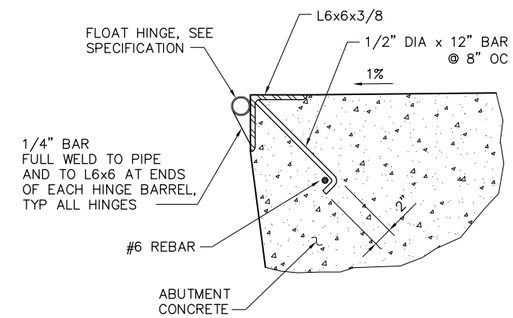

NOTES:

1. FACE OF ABUTMENT IS PERPENDICULAR TO RAMP SURFACE.
2. GALVANIZE HINGE ASSEMBLY AFTER FABRICATION.
3. ALL WELDS TO BE MADE WITH HINGE PIN IN PLACE TO ENSURE PROPER FIT.
4. FLOAT HINGE – 1" DIA STAINLESS STEEL ROD W/COTTER KEYS @ ENDS & IGLIDE FLANGE BEARINGS #JFI-1620 (10 REQUIRED) BY IGUS IND.(PROVIDE 100% SPARES)

3 C67 ABUTMENT HINGE DETAIL
C68
SCALE: 1 1/2" = 1'-0"

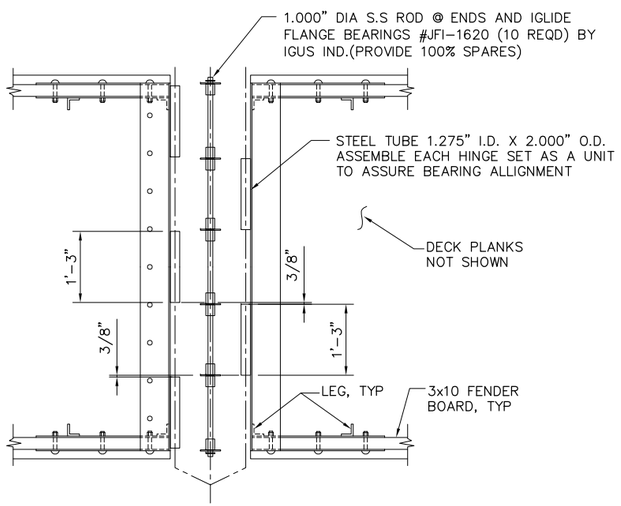

PLAN

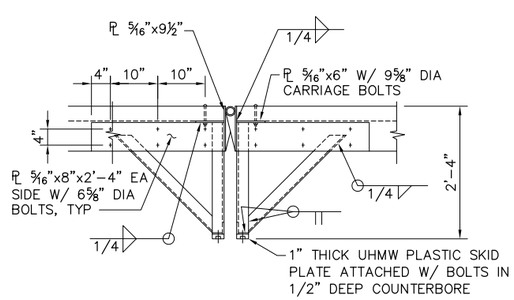

ELEVATION

4 C67 TYPICAL HINGE DETAIL
SCALE: 3/4" = 1'-0"

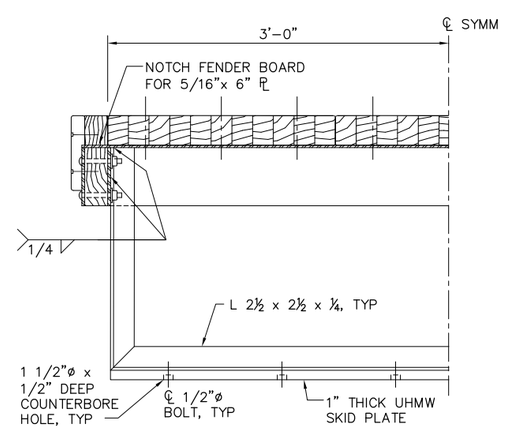

OFFSHORE LEG DETAIL
SCALE: 1 1/2" = 1'-0"

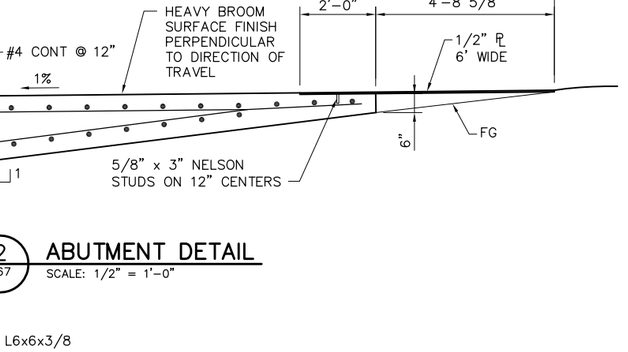

B C67 SECTION
SCALE: 3" = 1'-0"

1'-0" 0'-0" 6" 1'-0"
SCALE: 1 1/2"=1'-0"

2'-0" 0'-0" 2'-0" 4'-0"
SCALE: 1/2"=1'-0"

100% SUBMITTAL REVISION 1

IF SHEET IS LESS THAN 22" x 34" IT IS A REDUCED PRINT – SCALE REDUCED ACCORDINGLY.

REVISION	DESCRIPTION	BY	DATE

San Luis & Delta-Mendota Water Authority
842 6th Street, Suite 7
PO Box 2157
Los Banos, California 93635

Moffatt & Nichol
2001 N. Main Street, Suite 360
Walnut Creek, California 94596
(925) 944-5411

DSGN	DR	CHK
JMB	AB	TDB
JOB NO. 6097-03	SUBMITTED BY RMR	

2-GATES FISH PROTECTION DEMONSTRATION PROJECT

BOARDING FLOAT DETAILS

DATE 10/02/09

SHEET 64 OF 78

C68

P:\6097-03 SWC GATE DESIGN\CADD\DWG\609703-C68.DWG 9/1/2009 10:39 AM

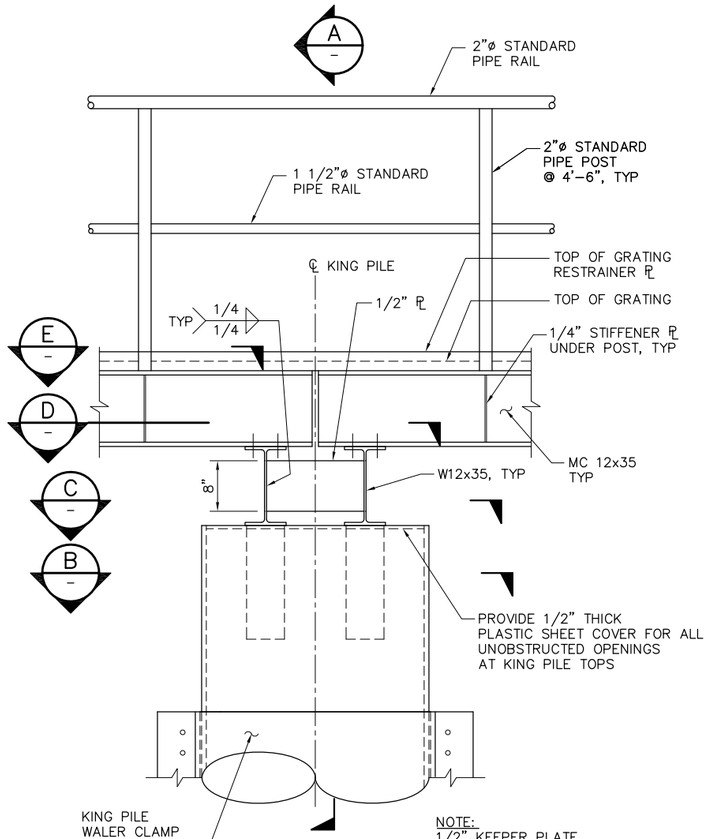

NOTE:
1/2" KEEPER PLATE NOT SHOWN FOR CLARITY.

ELEVATION

1 / C11 DETAIL
SCALE: 1" = 1'-0"

C12, C40

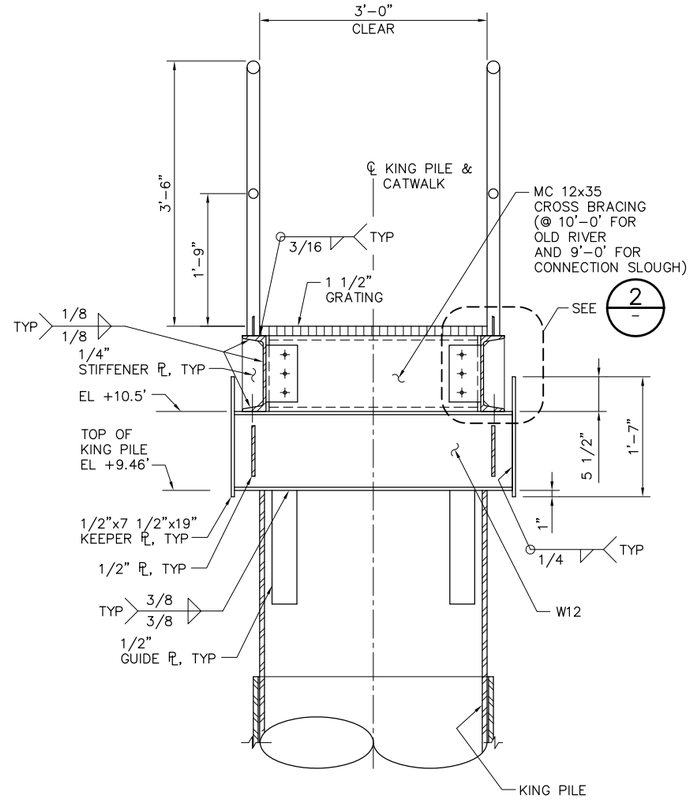

A / - SECTION
SCALE: 1" = 1'-0"

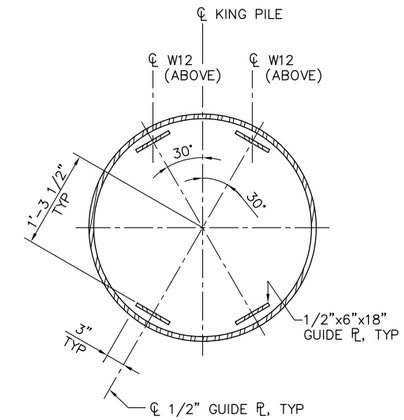

B / - SECTION
SCALE: 1" = 1'-0"

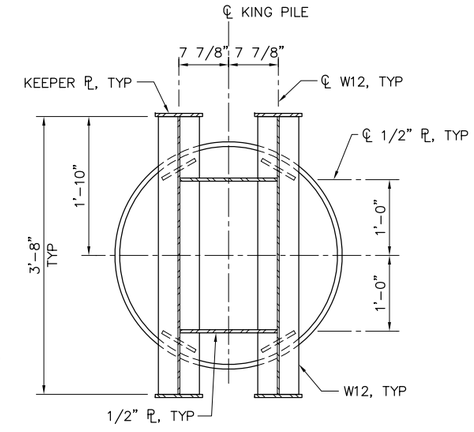

C / - SECTION
SCALE: 1" = 1'-0"

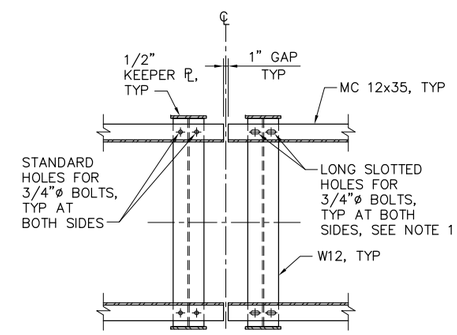

D / - SECTION
SCALE: 3/4" = 1'-0"

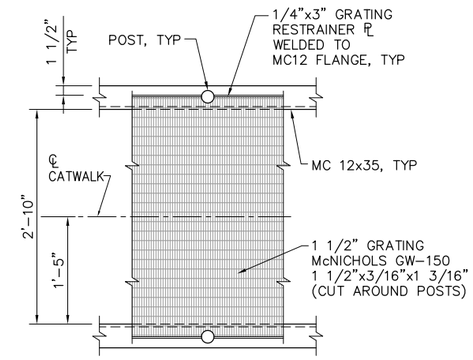

PLAN AT GRATING PLATE

E / - SECTION
SCALE: 1" = 1'-0"

C72

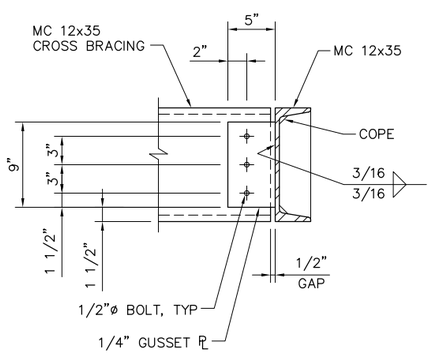

TYPICAL GUSSET CONNECTION DETAIL

2 / -
SCALE: 1 1/2" = 1'-0"

C72

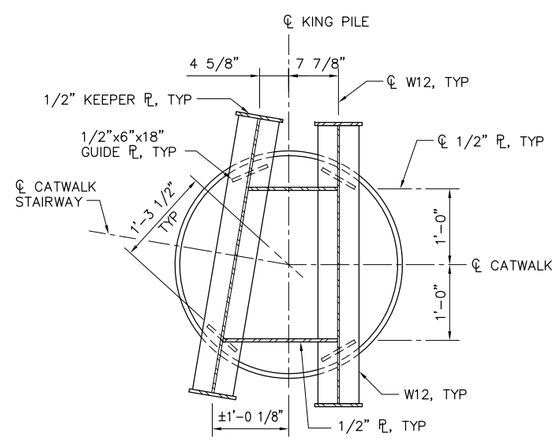

3 / C70 DETAIL
SCALE: 1" = 1'-0"

NOTES:

1. PROVIDE 1/16" THICK SLIDE PAD (HDPE OR EQUIVALENT) AT EXPANSION SUPPORTS WHERE LONG SLOTTED HOLES PERMIT EXPANSION.
2. FOR ADDITIONAL WELD INFORMATION SEE DWGS C70 AND C71.

2'-0" 0'-0" 1'-0" 2'-0"
SCALE: 3/4"=1'-0"

100% SUBMITTAL REVISION 1

IF SHEET IS LESS THAN 22" x 34" IT IS A REDUCED PRINT – SCALE REDUCED ACCORDINGLY.

REVISION	DESCRIPTION	BY	DATE

San Luis & Delta-Mendota Water Authority
842 6th Street, Suite 7
PO Box 2157
Los Banos, California 93635

Moffatt & Nichol
2001 N. Main Street, Suite 360
Walnut Creek, California 94596
(925) 944-5411

DSGN	DR	CHK
JMB	EP/AB	TDB
JOB NO. 6097-03	SUBMITTED BY RMR	

2-GATES FISH PROTECTION DEMONSTRATION PROJECT

DATE 10/02/09

SHEET 65 OF 78

CATWALK DETAILS SHEET 1

C69

P:\6097-03 SWC GATE DESIGN\CADD\DWG\609703-C69.DWG 9/1/2009 10:39 AM

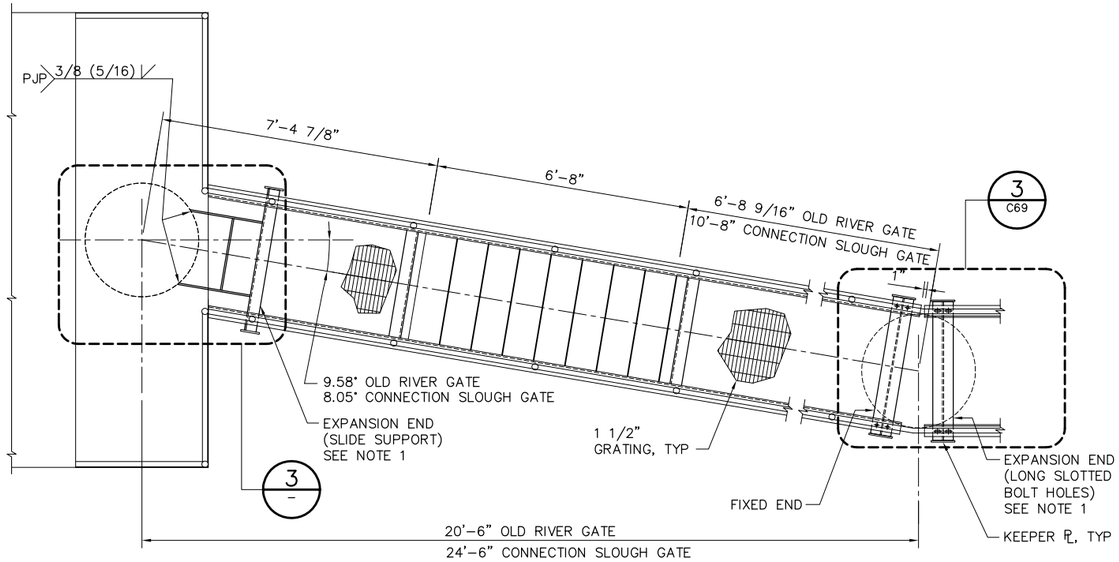

PLAN

1 DETAIL
C12
C40
SCALE: 1/2" = 1'-0"

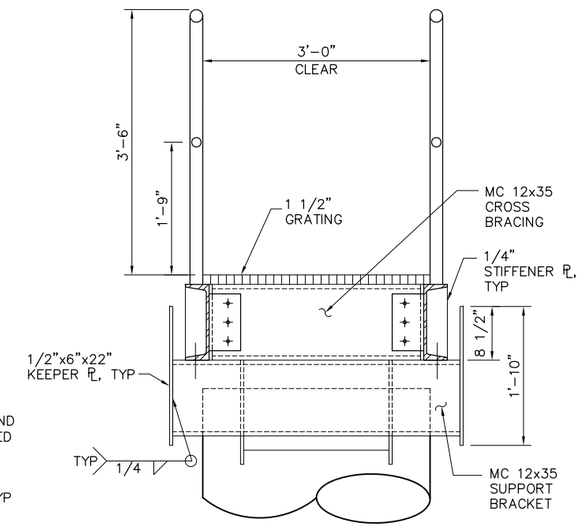

A SECTION
C71
SCALE: 1"=1'-0"

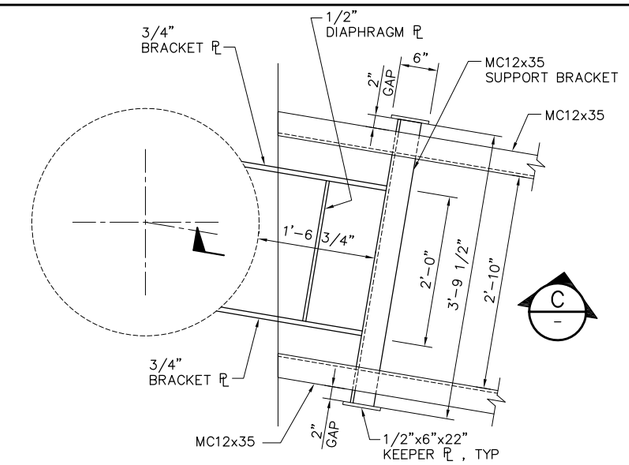

3 DETAIL
SCALE: 1"=1'-0"

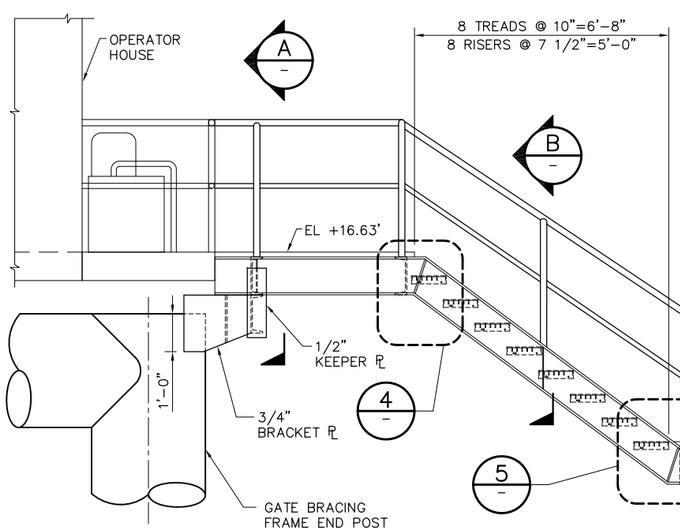

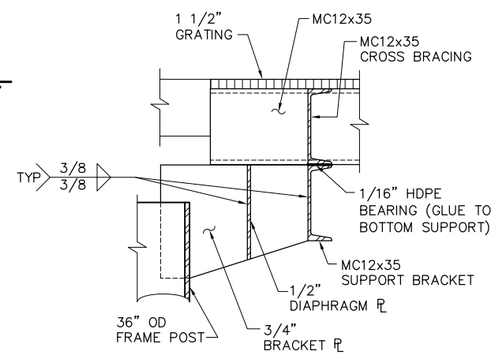

C SECTION
SCALE: 1"=1'-0"

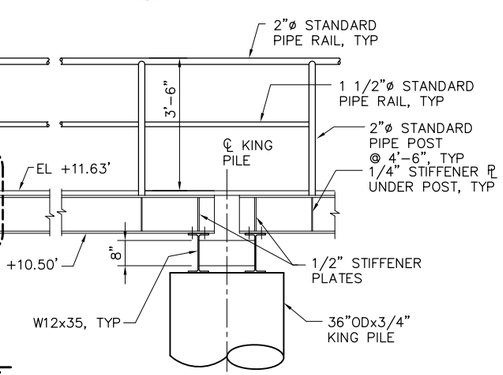

ELEVATION

2 DETAIL
C12
C40
SCALE: 1/2" = 1'-0"

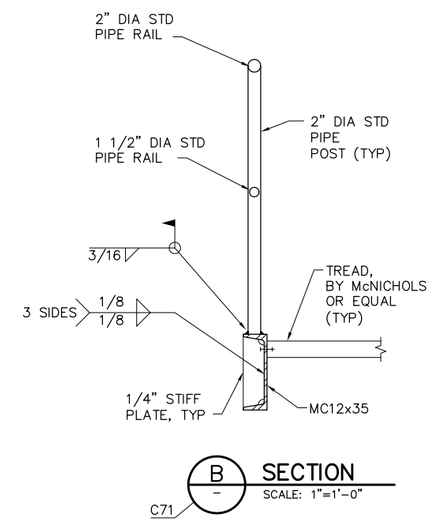

B SECTION
C71
SCALE: 1"=1'-0"

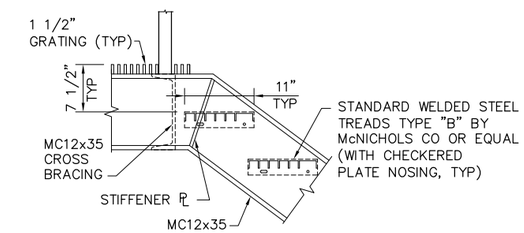

4 DETAIL
SCALE: 1"=1'-0"

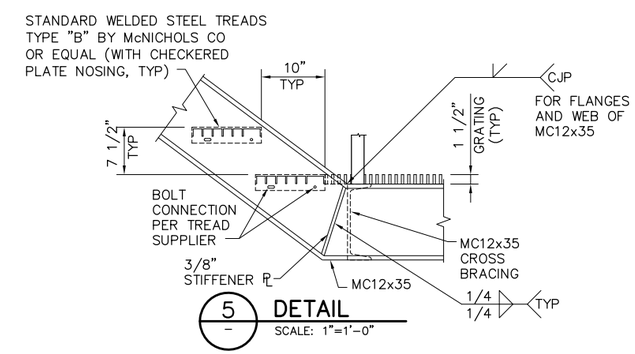

5 DETAIL
SCALE: 1"=1'-0"

2'-0" 0'-0" 2'-0" 4'-0"
SCALE: 1/2"=1'-0"

1'-0" 0'-0" 1'-0" 2'-0"
SCALE: 1"=1'-0"

NOTES:

1. PROVIDE 1/16" THICK HDPE SLIDE/BEARING PLATE AT EXPANTION ENDS AT UNDERSIDE OF MC12x35.
2. FOR ADDITIONAL WELD INFORMATION SEE DWGS C69 AND C71.

100% SUBMITTAL REVISION 1

IF SHEET IS LESS THAN 22" x 34" IT IS A REDUCED PRINT – SCALE REDUCED ACCORDINGLY.

REVISION	DESCRIPTION	BY	DATE

San Luis & Delta-Mendota Water Authority
842 6th Street, Suite 7
PO Box 2157
Los Banos, California 93635

Moffatt & Nichol
2001 N. Main Street, Suite 360
Walnut Creek, California 94596
(925) 944-5411

DSGN	DR	CHK
JMB	AB/EP	TDB
JOB NO. 6097-03	SUBMITTED BY RMR	

2-GATES FISH PROTECTION DEMONSTRATION PROJECT

CATWALK DETAILS SHEET 2

DATE 10/02/09

SHEET 66 OF 78

C70

P:\6097-03 SWC GATE DESIGN\CADD\DWG\609703-C70.DWG 9/1/2009 10:40 AM

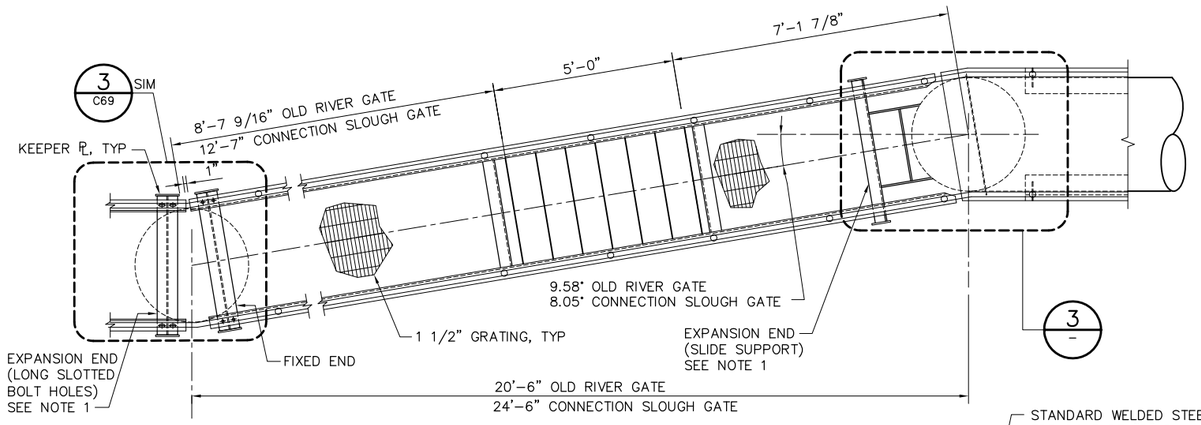

PLAN

1 C11 DETAIL
SCALE: 1/2" = 1'-0"
C40

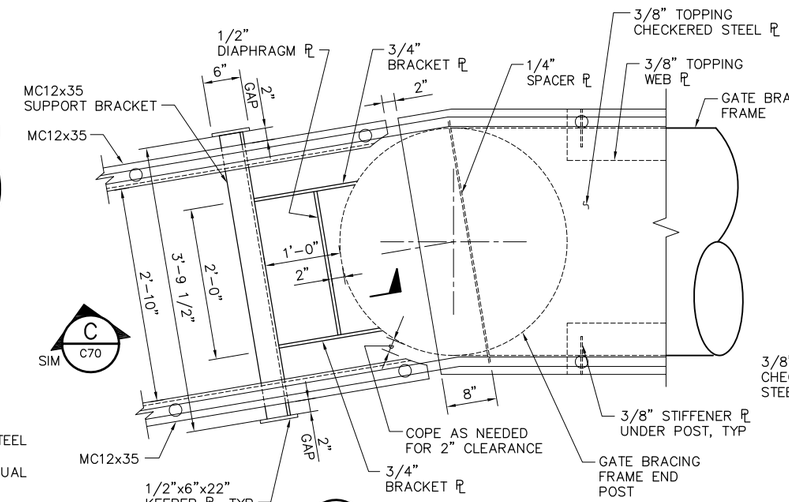

3 – DETAIL
SCALE: 1"=1'-0"

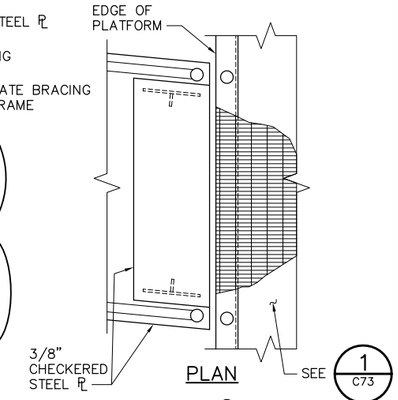

PLAN

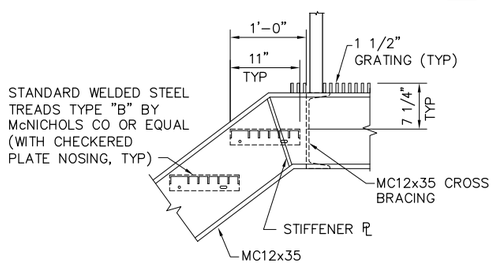

4 – DETAIL
SCALE: 1"=1'-0"

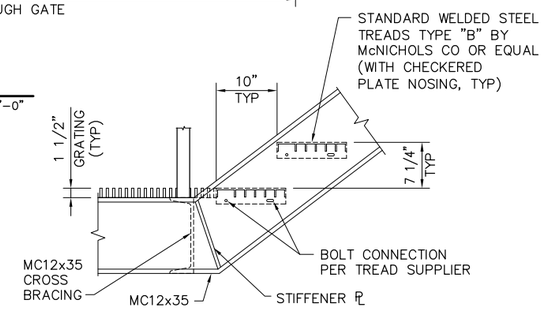

5 – DETAIL
SCALE: 1"=1'-0"

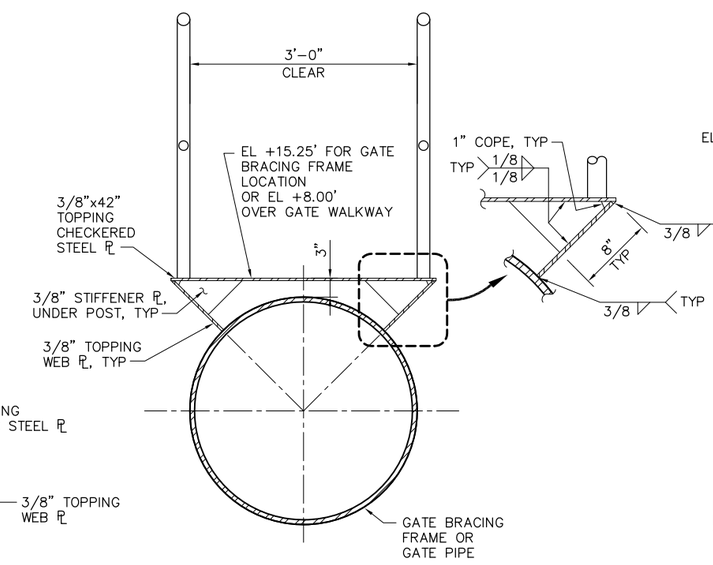

D – SECTION
SCALE: 1"=1'-0"
C15,C43

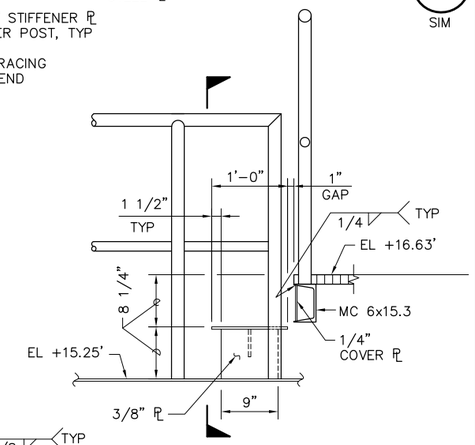

ELEVATION

6 C15 DETAIL
SCALE: 1"=1'-0"
C43

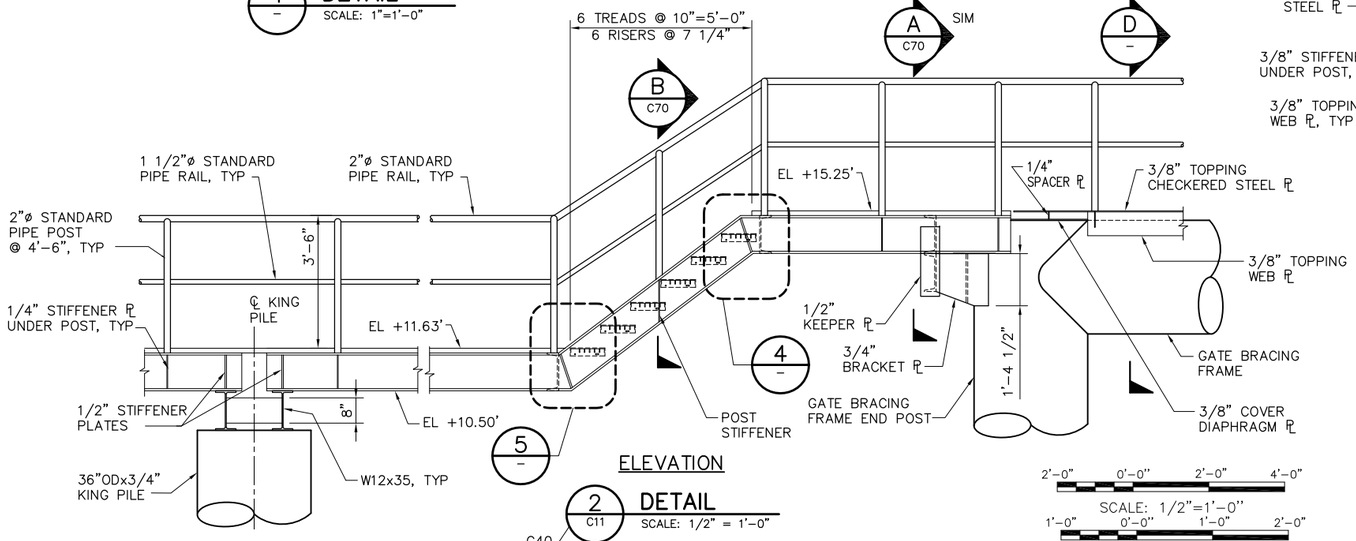

ELEVATION

2 C11 DETAIL
SCALE: 1/2" = 1'-0"
C40

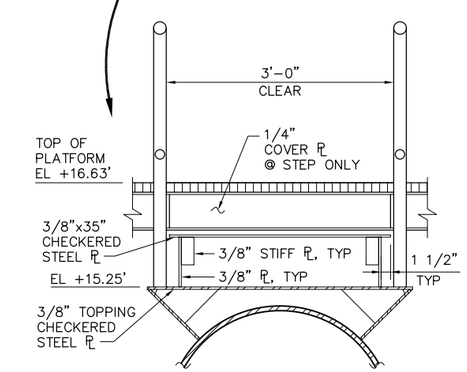

2'-0" 0'-0" 2'-0" 4'-0"
SCALE: 1/2"=1'-0"
1'-0" 0'-0" 1'-0" 2'-0"
SCALE: 1"=1'-0"

NOTES:

1. PROVIDE 1/16" THICK HDPE SLIDE/BEARING PLATE AT EXPANSION ENDS AT UNDERSIDE OF MC12x35.
2. FOR WELD INFORMATION SEE DWGS C69 AND C70.

100% SUBMITTAL REVISION 1

IF SHEET IS LESS THAN 22" x 34" IT IS A REDUCED PRINT – SCALE REDUCED ACCORDINGLY.

REVISION	DESCRIPTION	BY	DATE

San Luis & Delta-Mendota Water Authority
842 6th Street, Suite 7
PO Box 2157
Los Banos, California 93635

Moffatt & Nichol
2001 N. Main Street, Suite 360
Walnut Creek, California 94596
(925) 944-5411

DSGN	DR	CHK
JMB	AB/EP	TDB
JOB NO. 6097-03	SUBMITTED BY RMR	

2-GATES FISH PROTECTION DEMONSTRATION PROJECT

CATWALK DETAILS SHEET 3

DATE 10/02/09

SHEET 67 OF 78

C71

P:\6097-03 SWC GATE DESIGN\CADD\DWG\609703-C71.DWG 9/1/2009 10:40 AM

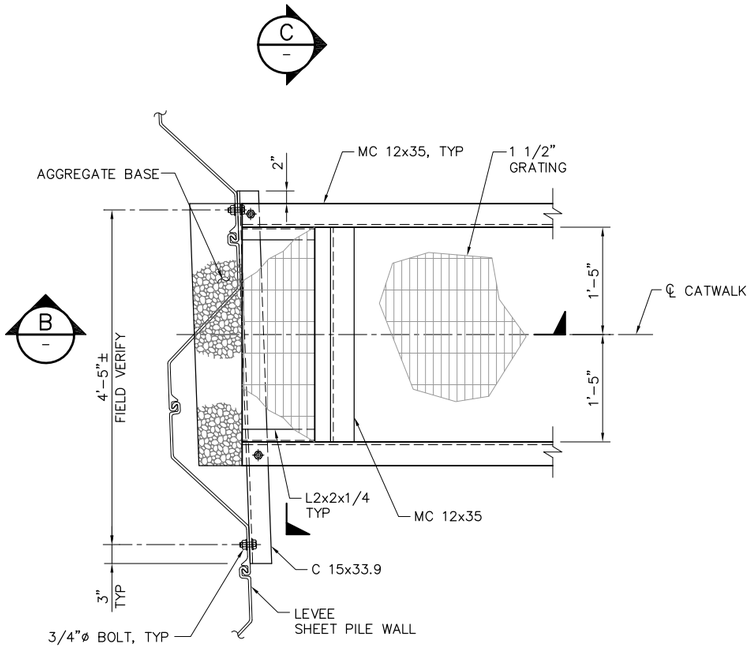

PLAN AT END OF CATWALK

1 / C11 DETAIL
SCALE: 1" = 1'-0"
C40

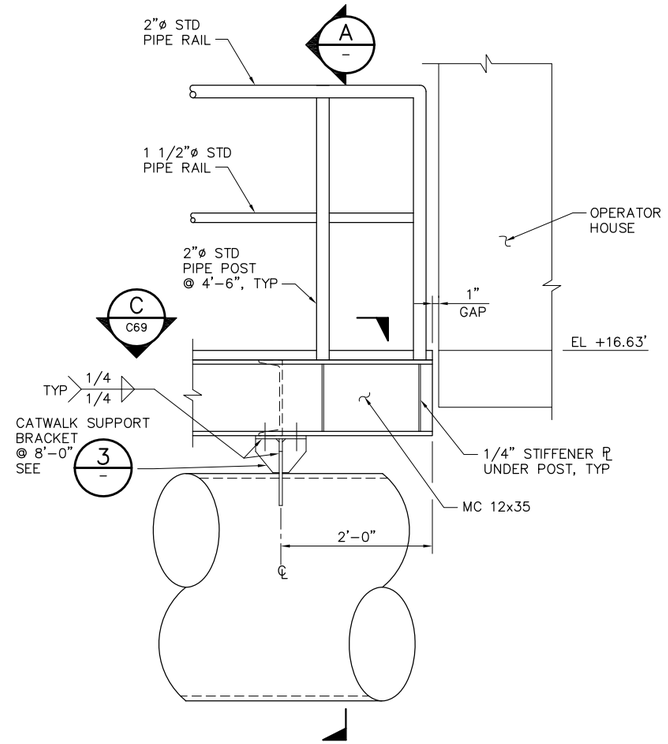

2 / C15 DETAIL
SCALE: 1"=1'-0"
C43

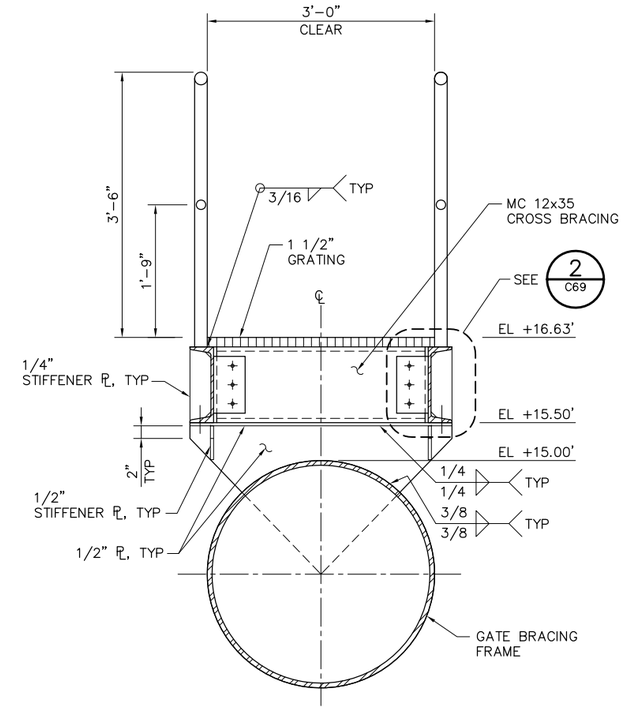

A / – SECTION
SCALE: 1"=1'-0"

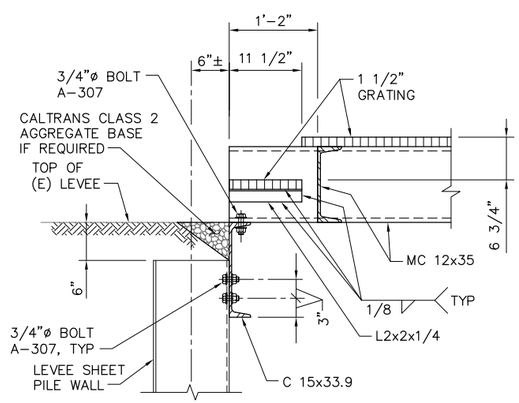

B / – SECTION
SCALE: 1" = 1'-0"

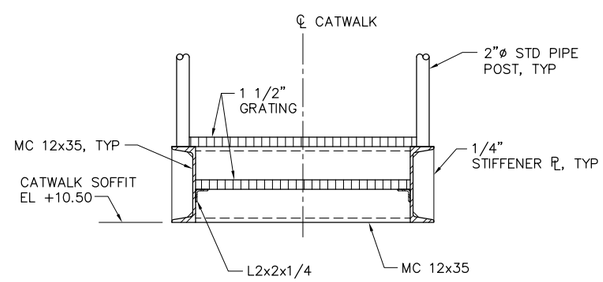

C / – SECTION
SCALE: 1" = 1'-0"

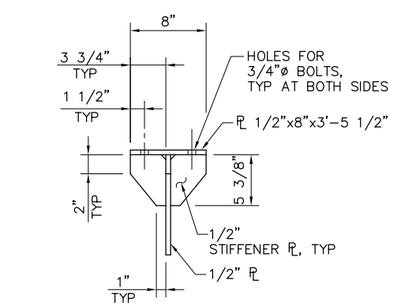

3 / – DETAIL
SCALE: 1"=1'-0"
C73

NOTE:

FOR ADDITIONAL WELD INFORMATION SEE DWGS C69, C70 AND C71.

1'-0" 0'-0" 1'-0" 2'-0"
SCALE: 1"=1'-0"

100% SUBMITTAL REVISION 1

IF SHEET IS LESS THAN 22" x 34" IT IS A REDUCED PRINT – SCALE REDUCED ACCORDINGLY.

REVISION	DESCRIPTION	BY	DATE

San Luis & Delta-Mendota Water Authority
842 6th Street, Suite 7
PO Box 2157
Los Banos, California 93635

Moffatt & Nichol
2001 N. Main Street, Suite 360
Walnut Creek, California 94596
(925) 944-5411

DSGN	DR	CHK
JMB	EP	TDB
JOB NO. 6097-03	SUBMITTED BY RMR	

2-GATES FISH PROTECTION DEMONSTRATION PROJECT

CATWALK DETAILS SHEET 4

DATE 10/02/09

SHEET 68 OF 78

C72

P:\6097-03 SWC GATE DESIGN\CADD\DWG\609703-C72.DWG 9/30/2009 4:30 PM

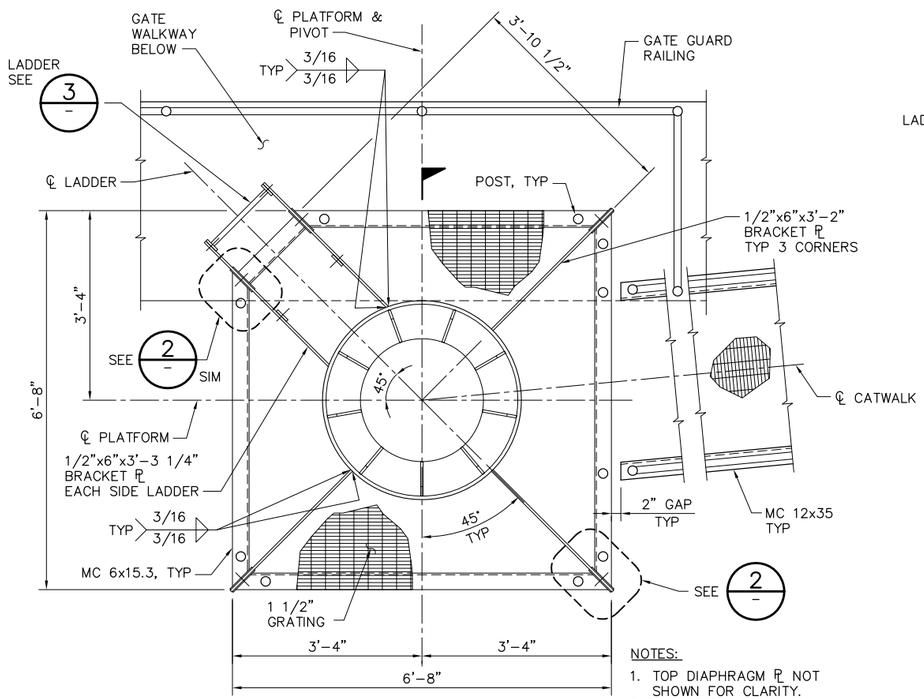

C

PLAN

NOTES:

1. TOP DIAPHRAGM PL NOT SHOWN FOR CLARITY.
2. NAVIGATION LIGHT NOT SHOWN FOR CLARITY.
3. GRATING TO BE FASTENED TO MC 6x15.3 BY STD CLIPS.

1 / C14 — C15,C42,C43 **PLATFORM DETAIL**
SCALE: 3/4" = 1'-0"

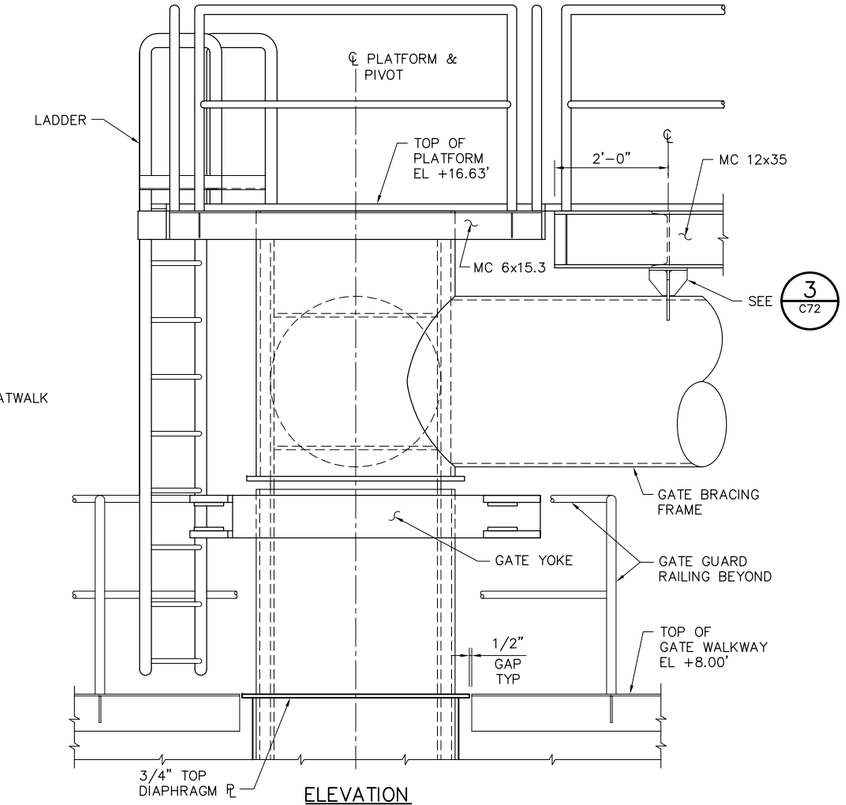

ELEVATION

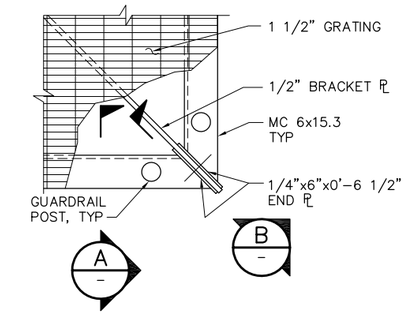

2 **DETAIL**
SCALE: 1 1/2" = 1'-0"

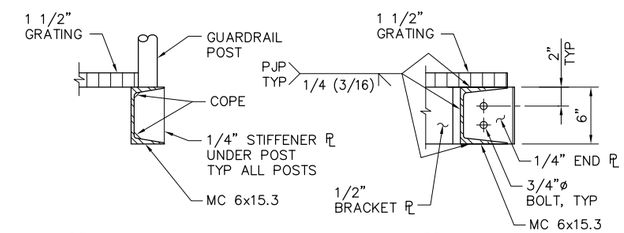

A **SECTION**
SCALE: 1 1/2" = 1'-0"

B **SECTION**
SCALE: 1 1/2" = 1'-0"

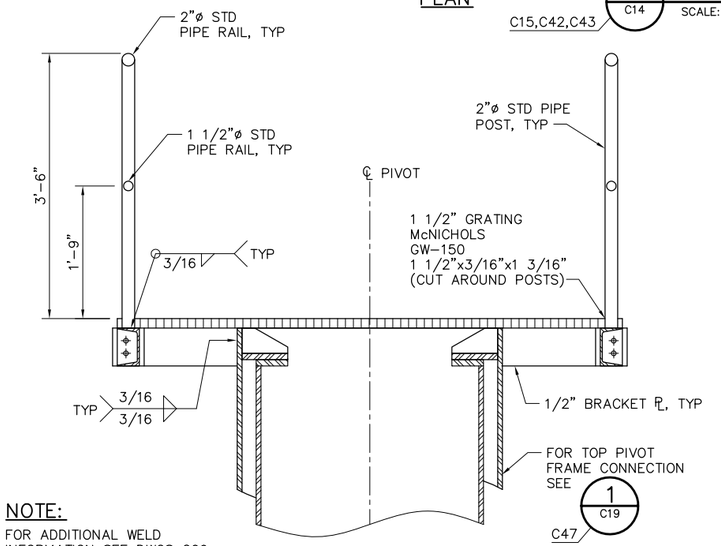

NOTE:
FOR ADDITIONAL WELD INFORMATION SEE DWGS C69 THROUGH C72.

C **SECTION**
SCALE: 1" = 1'-0"

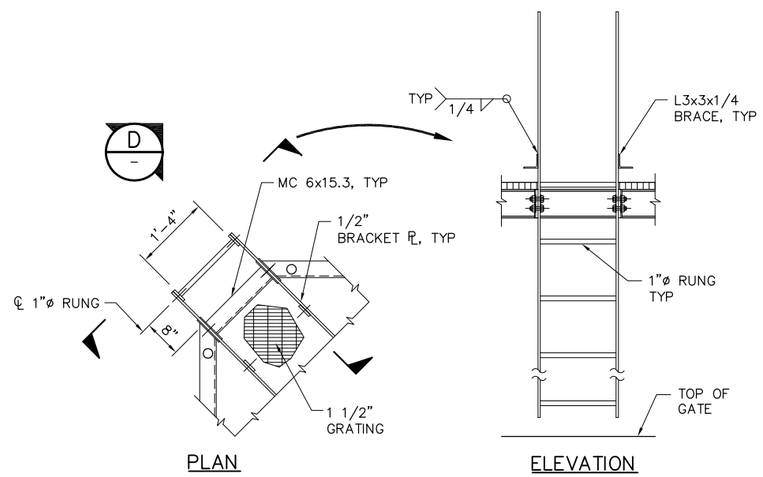

PLAN

ELEVATION

3 **LADDER DETAIL**
SCALE: 3/4" = 1'-0"

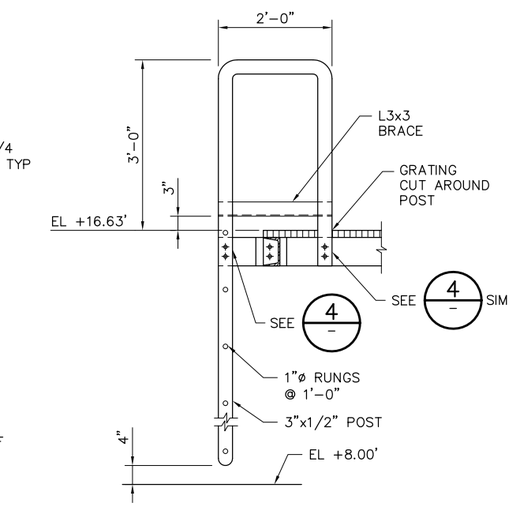

D **SECTION**
SCALE: 3/4" = 1'-0"

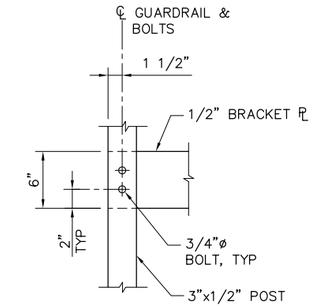

4 **DETAIL**
SCALE: 1 1/2" = 1'-0"

2'-0" 0'-0" 1'-0" 2'-0"
SCALE: 3/4"=1'-0"

100% SUBMITTAL REVISION 1

IF SHEET IS LESS THAN 22" x 34" IT IS A REDUCED PRINT – SCALE REDUCED ACCORDINGLY.

REVISION	DESCRIPTION	BY	DATE

San Luis & Delta-Mendota Water Authority
842 6th Street, Suite 7
PO Box 2157
Los Banos, California 93635

Moffatt & Nichol
2001 N. Main Street, Suite 360
Walnut Creek, California 94596
(925) 944-5411

DSGN	DR	CHK
JMB	EP/AB	TDB
JOB NO. 6097-03	SUBMITTED BY RMR	

2-GATES FISH PROTECTION DEMONSTRATION PROJECT

CATWALK DETAILS SHEET 5

DATE 10/02/09

SHEET 69 OF 78

C73

P:\6097-03 SWC GATE DESIGN\CADD\DWG\609703-C73.DWG 9/1/2009 10:41 AM

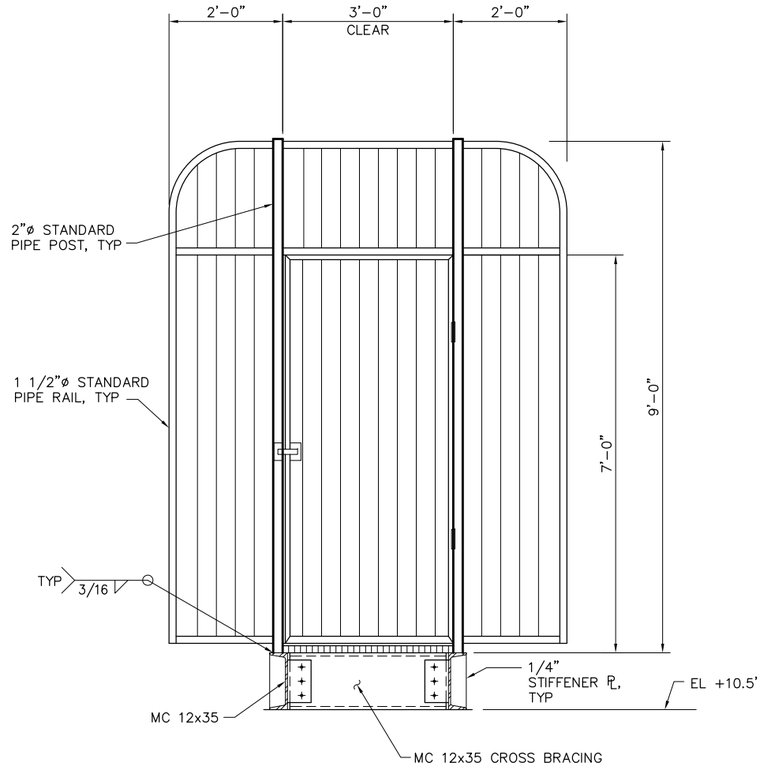

NOTE:
SECURITY GATE SHALL PROVIDE A MINIMUM 36" CLEAR OPENING, SHALL BE AUTOMATICALLY CLOSING, AND SHALL INCLUDE A LOCKABLE LATCH.

SECURITY GATE ELEVATION

1 / C11 DETAIL
SCALE: 3/4" = 1'-0"
C12,C40

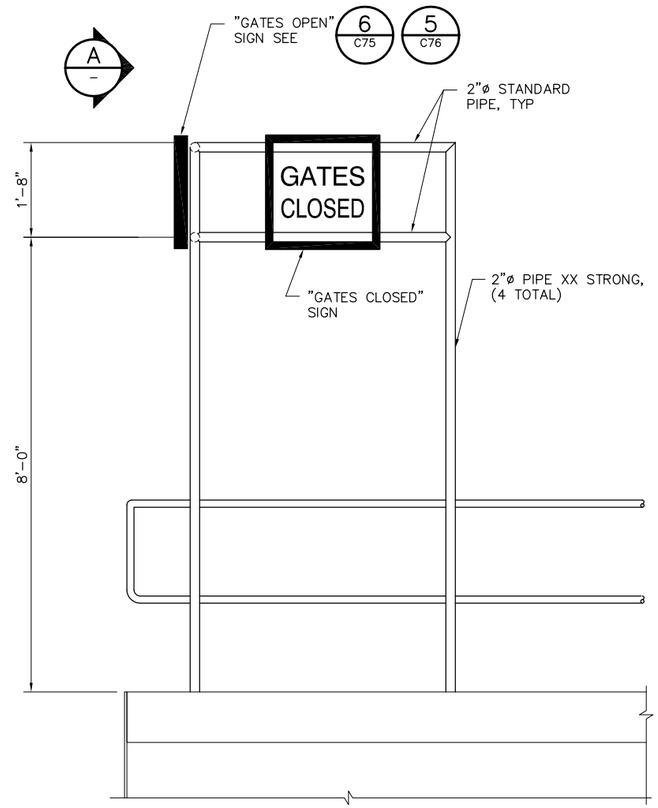

2 / C15 DETAIL
SCALE: 3/4" = 1'-0"
C43,

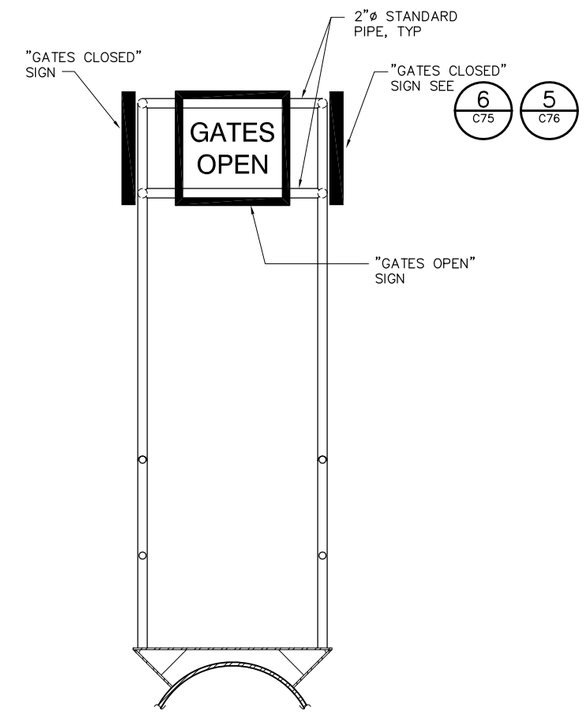

A / – ELEVATION
SCALE: 3/4" = 1'-0"

NOTE:
FOR ADDITIONAL WELD INFORMATION SEE DWGS C68 THROUGH C73.

2'-0" 0'-0" 1'-0" 2'-0"
SCALE: 3/4"=1'-0"

100% SUBMITTAL REVISION 1

IF SHEET IS LESS THAN 22" x 34" IT IS A REDUCED PRINT – SCALE REDUCED ACCORDINGLY.

REVISION	DESCRIPTION	BY	DATE

San Luis & Delta-Mendota Water Authority
842 6th Street, Suite 7
PO Box 2157
Los Banos, California 93635

Moffatt & Nichol
2001 N. Main Street, Suite 360
Walnut Creek, California 94596
(925) 944-5411

DSGN	DR	CHK
JMB	AB	TDB
JOB NO. 6097-03	SUBMITTED BY RMR	

2-GATES FISH PROTECTION DEMONSTRATION PROJECT

DATE 10/02/09

SHEET 70 OF 78

CATWALK DETAILS
SHEET 6

C74

P:\6097-03 SWC GATE DESIGN\CADD\DWG\609703-C74.DWG 9/1/2009 10:41 AM

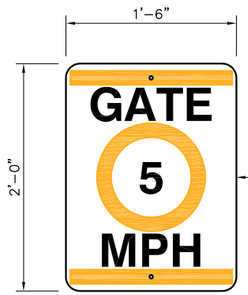

ALUMINUM SIGN 0.080" THICK MIN, WITH TWO ⅜"ø HOLES TOP AND BOTTOM FOR MOUNTING TO DOLPHIN PILES

SIGNBOARD ON PILE, ORANGE ON WHITE WITH BLACK LETTERS

1 C26 C54 GATE 5 MPH SIGN
SCALE: NONE

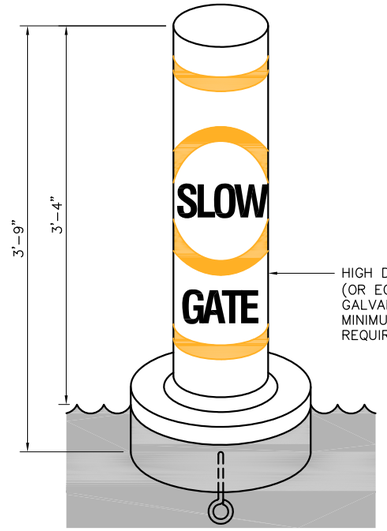

HIGH DENSITY POLYETHYLENE (OR EQUAL) BUOY WITH ½"ø GALVANIZED STEEL EYEBOLT; MINIMUM 35–40 LBS OF CHAIN REQUIRED TO FLOAT UPRIGHT

ORANGE ON WHITE WITH BLACK LETTERS

NOTE:
45' OF 1/2" OPEN LINK CHAIN WITH 25 LB DANFORTH STANDARD ANCHOR.

2 C26 C54 SLOW GATE SIGN
SCALE: NONE

3'–6"

5'–0"

BOAT RAMP OPERATION

1. Hours of Ramp Operation (if limited):
   -
   -
   -
2. Contact Gate Tender for assistance with ramp operation.
   Radio:
   Telephone:
   Horn:
3. Use of the dock or the ramp for purposes other than passing over the barrier when the gates are closed is prohibited.
4. Boats may not remain at the ramp dock or in the controlled navigation area at any time.

BLACK LETTERS ON WHITE PAINTED ALUMINUM BOARD

3 C26 C54 BOAT RAMP DOCK SIGN
SCALE: NONE

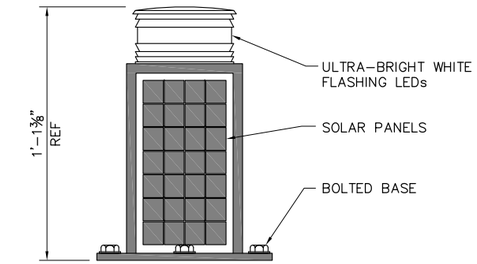

NAVIGATION LIGHT;
ATOP GATE PLATFORM AND ALONG SHEET PILE WHERE NOTED.
CARMANAH MODEL M702–5GPS OR EQUAL – SEE SPECIFICATIONS.

4 C26 C54 NAVIGATION LIGHT
SCALE: NONE

10'–8"

GATE CLOSED

OR

GATE OPEN

CHANGEABLE ELECTRIC MESSAGEBOARD 12 LETTER, 12" HIGH, VISIBLE FROM 600', MOUNTED ON OPERATOR HOUSE ROOF ONE EACH FACING UPSTREAM & DOWNSTREAM.
MODEL PDR0112–12 FROM GRANDWELL DISPLAYS OR EQUAL

8 C26 C54 ELECTRONIC MESSAGE SIGN
SCALE: NONE

4'–0"

RED "WARNING" LETTERS

3'–0"

WARNING

GATES ARE OPERATED AS RIVER CONDITIONS CHANGE AND MAY BE OPENED OR CLOSED AT ANYTIME. HORN WILL BE SOUNDED 20 MINUTES PRIOR TO OPENING OR CLOSING.
CONTACT: 000-000-0000

BLACK LETTERS ON WHITE PAINTED ALUMINUM BOARD
CONTACT NUMBER TO BE PROVIDED BY OWNER

5 C26 C54 GATE WARNING SIGN
SCALE: NONE

2'–0" SQUARE

GATES OPEN

2'–0" SQUARE

GATES CLOSED

BLACK LETTERS AND BORDER ON WHITE PAINTED ALUMINUM BOARD

6 C26 C54, C74 GATE POSITION SIGNS
SCALE: NONE

3'–0" SQUARE

LOW CLEARANCE

SWIFT CURRENTS

ORANGE SYMBOL AND BORDER, BLACK LETTERS ON WHITE PAINTED ALUMINUM BOARD

7 C26 C54 DANGER SIGN
SCALE: NONE

2'–0"

2'–6"

STAY BACK 200 FT

BLACK LETTERS AND BORDER ON WHITE PAINTED ALUMINUM BOARD

9 C26 C54 STAY BACK WARNING SIGN
SCALE: NONE

2'–0"

1'–6"

OPENING
** FT

SIGN TO BE MOUNTED ON DOLPHIN PILES BENEATH GATE 5 MPH SIGNS.

OLD RIVER ** 75 FT

CONNECTION SLOUGH ** 60 FT

BLACK LETTERS AND BORDER ON WHITE PAINTED ALUMINUM BOARD

10 C26 C54 GATE OPENING SIGN
SCALE: NONE

NOTE:

SEE DRAWING C76 FOR SIGN MOUNTING DETAILS.

100% SUBMITTAL
REVISION 1

IF SHEET IS LESS THAN 22" x 34" IT IS A REDUCED PRINT – SCALE REDUCED ACCORDINGLY.

REVISION	DESCRIPTION	BY	DATE

San Luis & Delta–Mendota Water Authority
842 6th Street, Suite 7
PO Box 2157
Los Banos, California 93635

Moffatt & Nichol
2001 N. Main Street, Suite 360
Walnut Creek, California 94596
(925) 944–5411

DSGN	DR	CHK
RBD	TAE/AB	TDB
JOB NO. 6097–03	SUBMITTED BY RMR	

2–GATES FISH PROTECTION DEMONSTRATION PROJECT

DATE 10/02/09

SHEET 71 OF 78

AIDS TO NAVIGATION DETAILS, SHEET 1

C75

P:\6097–03 SWC GATE DESIGN\CADD\DWG\609703–C75.DWG 9/28/2009 2:00 PM

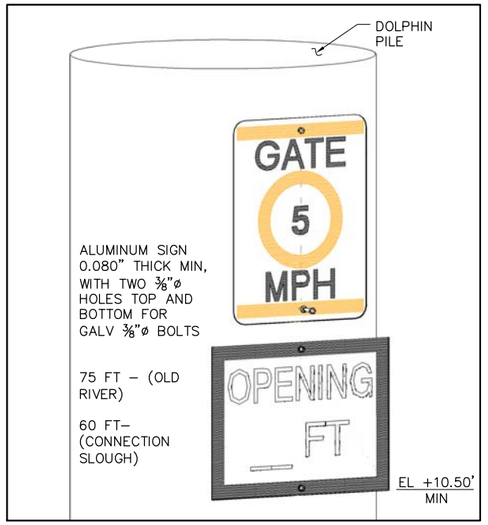

1 C26 C54 SIGN MOUNTING DETAIL
SCALE: NONE

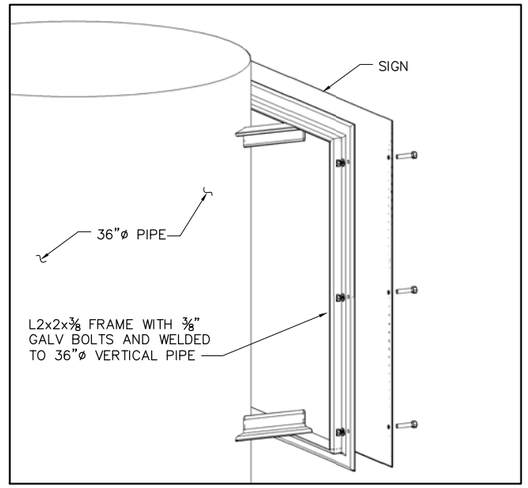

2 C26 C54 SIGN MOUNTING DETAIL
SCALE: NONE

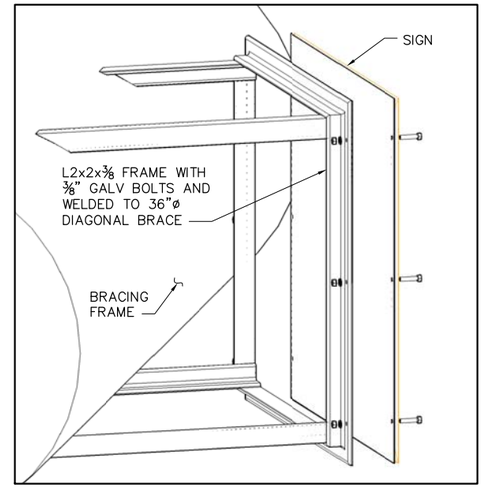

3 C26 C54 SIGN MOUNTING DETAIL
SCALE: NONE

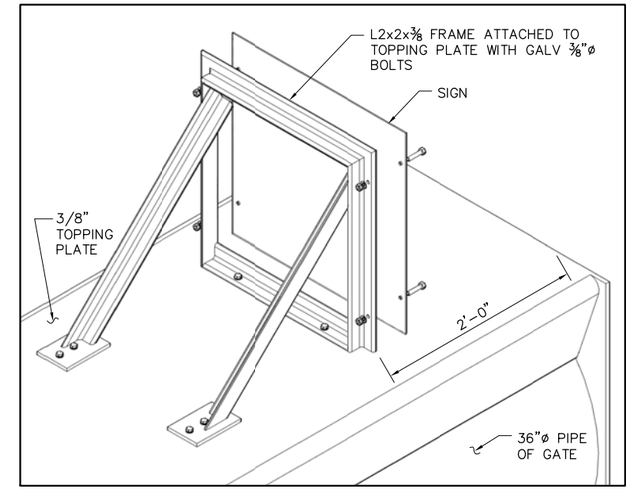

4 C26 C54 SIGN MOUNTING DETAIL
SCALE: NONE

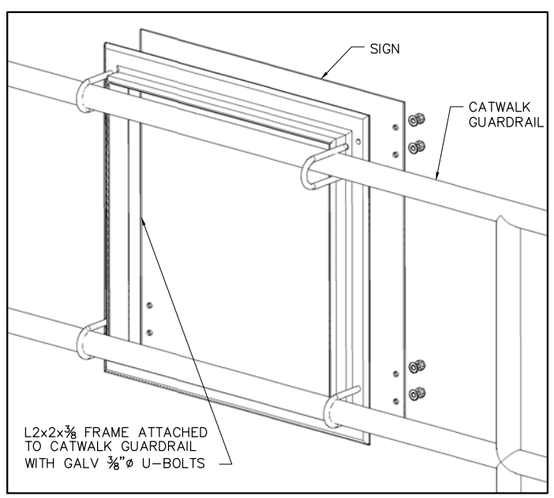

5 C26 C54 SIGNAGE MOUNTING DETAIL
SCALE: NONE

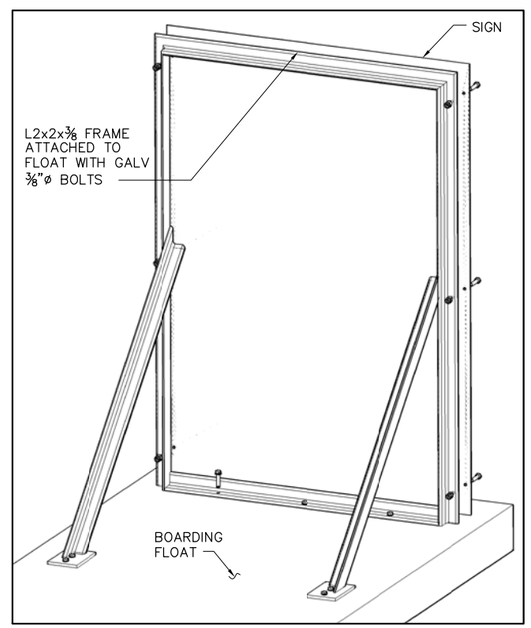

6 C26 C54 BOAT RAMP DOCK SIGN
SCALE: NONE

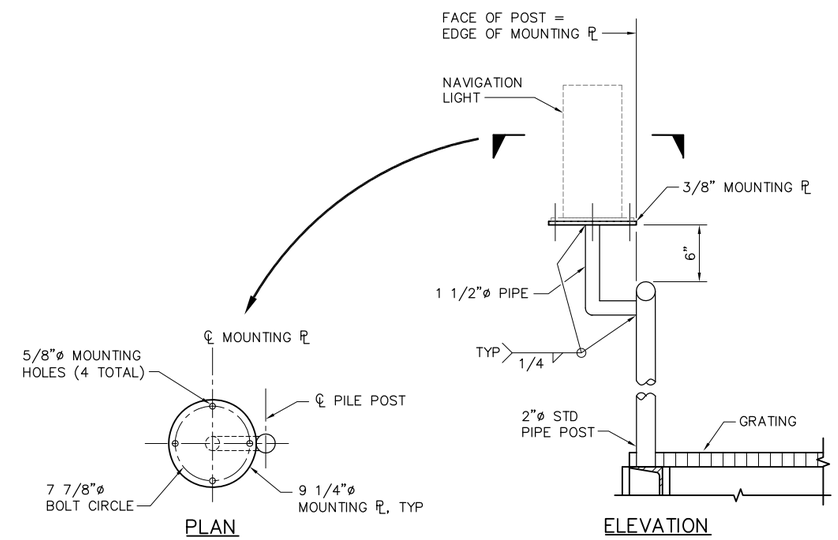

7 C15 C43 TYPICAL NAVIGATION LIGHT MOUNTING DETAIL
SCALE: 1 1/2" = 1'-0"

100% SUBMITTAL REVISION 1

IF SHEET IS LESS THAN 22" x 34" IT IS A REDUCED PRINT – SCALE REDUCED ACCORDINGLY.

REVISION	DESCRIPTION	BY	DATE

San Luis & Delta–Mendota Water Authority
842 6th Street, Suite 7
PO Box 2157
Los Banos, California 93635

Moffatt & Nichol
2001 N. Main Street, Suite 360
Walnut Creek, California 94596
(925) 944–5411

DSGN	DR	CHK
TDB	TAE/AB	RBD
JOB NO. 6097–03	SUBMITTED BY RMR	

2–GATES FISH PROTECTION DEMONSTRATION PROJECT

DATE 10/02/09

SHEET 72 OF 78

AIDS TO NAVIGATION DETAILS SHEET 2

C76

P:\6097–03 SWC GATE DESIGN\CADD\DWG\609703–C76.DWG 9/28/2009 2:01 PM

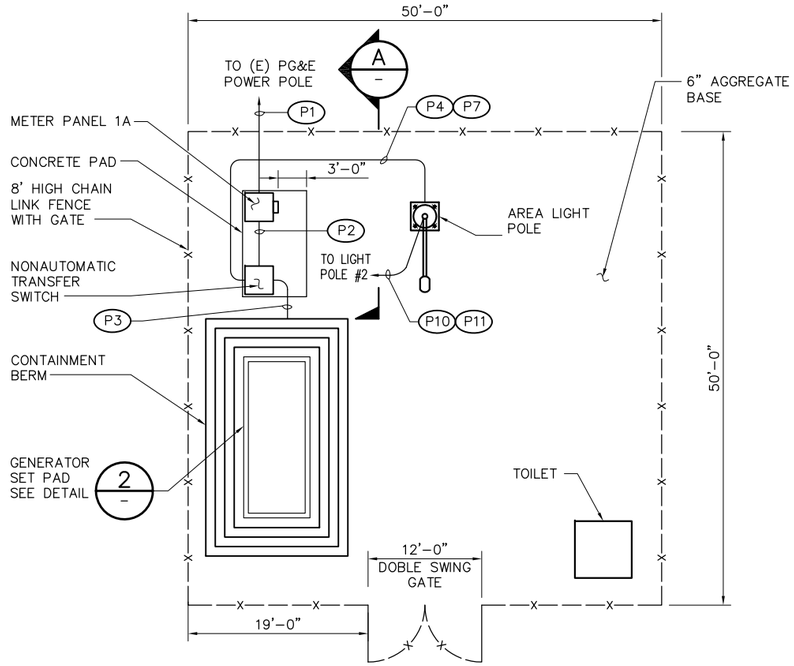

1 C13 **UTILITY YARD**
SCALE: 1/8"=1'-0"
C41

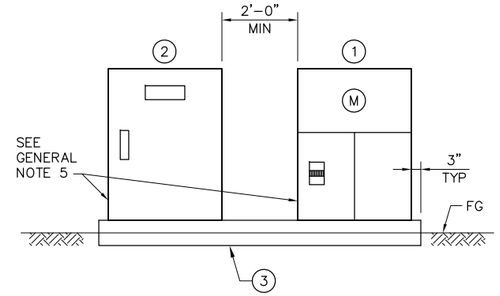

NOTES:

1. 225A 208Y/120V 3ø 4W METERED SERVICE PANEL "1A" IN A NEMA 3R ENCLOSURE.
2. 225A 208Y/120V 3ø 4 POLE NONAUTOMATIC TRANSFER SWITCH IN A NEMA 3R ENCLOSURE.
3. 8" THICK CONCRETE PAD WITH #4 @ 12 EW, 4" ABOVE FINISH GRADE.

A – **SERVICE PANEL AND TRANSFER SWITCH ELEVATION**
NTS

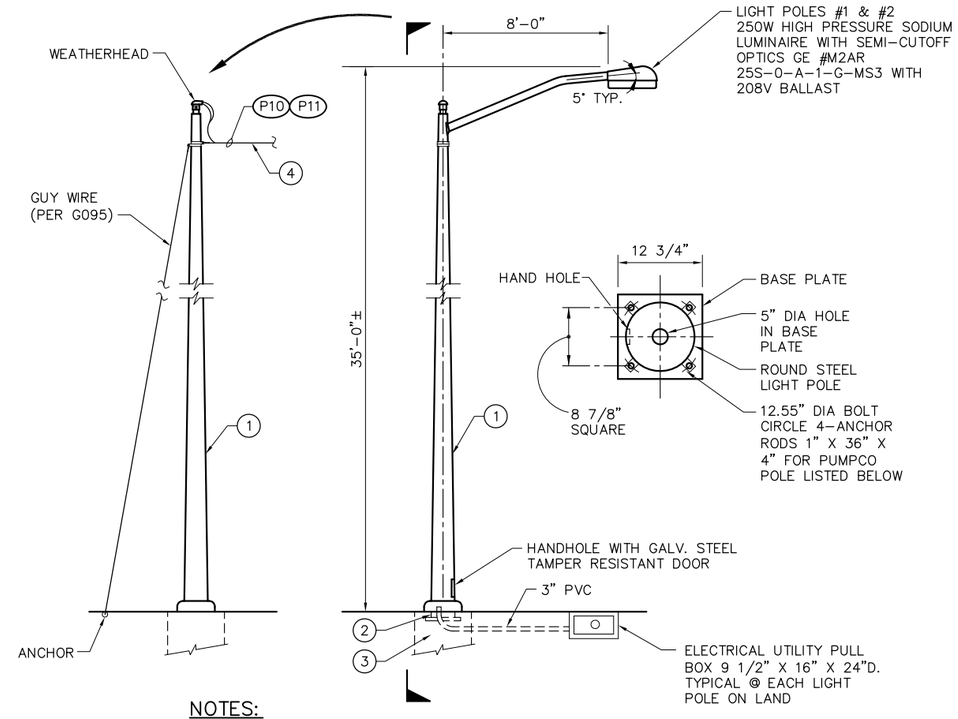

NOTES:

1. PUMPCO GALV. STEEL LIGHT POLE
2. VERIFY BOLT CIRCLE & SPACING DIMENSIONS WITH MFG.
3. FOR FOUNDATION SEE DWG C82.
4. OVERHEAD LINE SHALL COMPLY TO STATE OF CALIFORNIA GENERAL ORDER NO. 95. BASIC MINIMUM ALLOWABLE VERTICAL CLEARANCE TO GROUND.

3 C13 **AREA LIGHT POLE**
NTS
C82

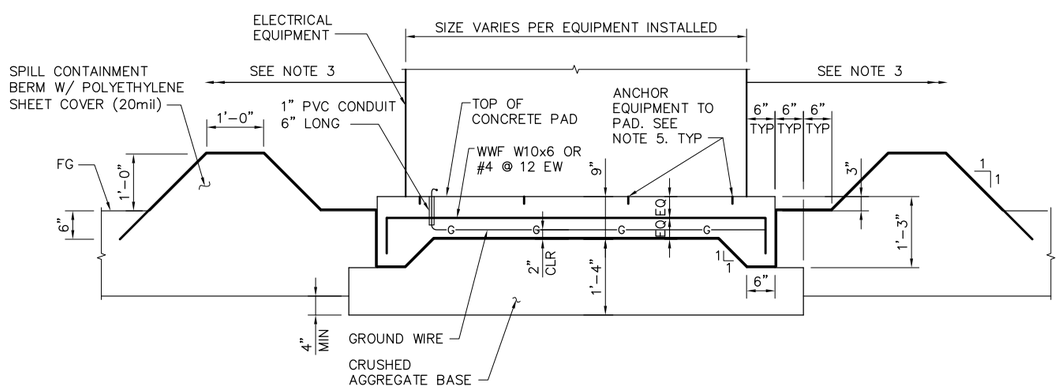

2 – **GENERATOR SET PAD DETAIL**
NTS

GENERAL NOTES:

1. PROVIDE AND INSTALL MIN 20'-0"L, 1-#3/0 MIN. BARE COPPER UFER GROUND WIRE 2" ABOVE BOTTOM OF PAD. BOND TO ELECTRICAL EQUIPMENT.
2. ANCHOR EQUIPMENT TO CONCRETE PAD WITH ANCHORS PER EQUIPMENT MANUFACTURER'S INSTALLATION INSTRUCTIONS.
3. PROVIDE 6'-0" MIN. CLEAR WORKING SPACE AROUND EQUIPMENT.
4. STUB CONDUITS IN EQUIPMENT AT LOCATIONS PROVIDED BY EQUIPMENT MANUFACTURERS INSTALLATION INSTRUCTIONS. COORDINATE EXACT LOCATION WITH MANUFACTURERS INSTALLATION INSTRUCTIONS.
5. ALL UNDER GROUND CONDUIT SHALL BE SCH 40 PVC 36" BELOW FINISH GRADE.

100% SUBMITTAL REVISION 1

IF SHEET IS LESS THAN 22" x 34" IT IS A REDUCED PRINT – SCALE REDUCED ACCORDINGLY.

REVISION	DESCRIPTION	BY	DATE

San Luis & Delta-Mendota Water Authority
842 6th Street, Suite 7
PO Box 2157
Los Banos, California 93635

Moffatt & Nichol
2001 N. Main Street, Suite 360
Walnut Creek, California 94596
(925) 944-5411

DSGN	DR	CHK
DM	AB/EP	CBS
JOB NO. 6097-03	SUBMITTED BY RMR	

2-GATES FISH PROTECTION DEMONSTRATION PROJECT

UTILITY YARD DETAILS

DATE 10/02/09

SHEET 73 OF 78

C77

P:\6097-03 SWC GATE DESIGN\CADD\DWG\609703-C77.DWG 10/1/2009 9:38 AM

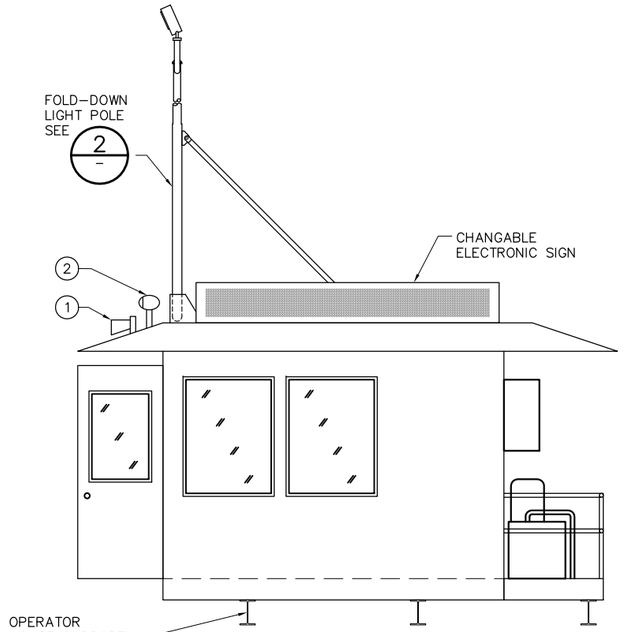

ELEVATION

SCALE: 3/8" = 1'-0"

NOTES:

1. SECO HAILER HORN
   40 HMS, 15 WITH
   STANDARD HORIZON
   30W LOUD HAILER
   MFG #VLH-3000
2. REMOTE CONTROLLED SEARCHLIGHT.
   ACR ELECTRONICS
   MFG #RCL-75 SPOTLIGHT
   AND 17' L CABLE HARNESS

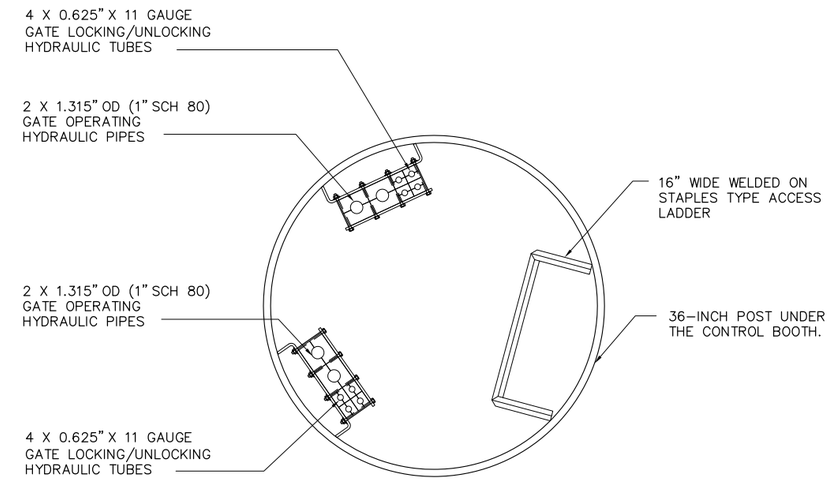

1/- UTILITY DETAIL

SCALE: 1 1/2" = 1'-0"

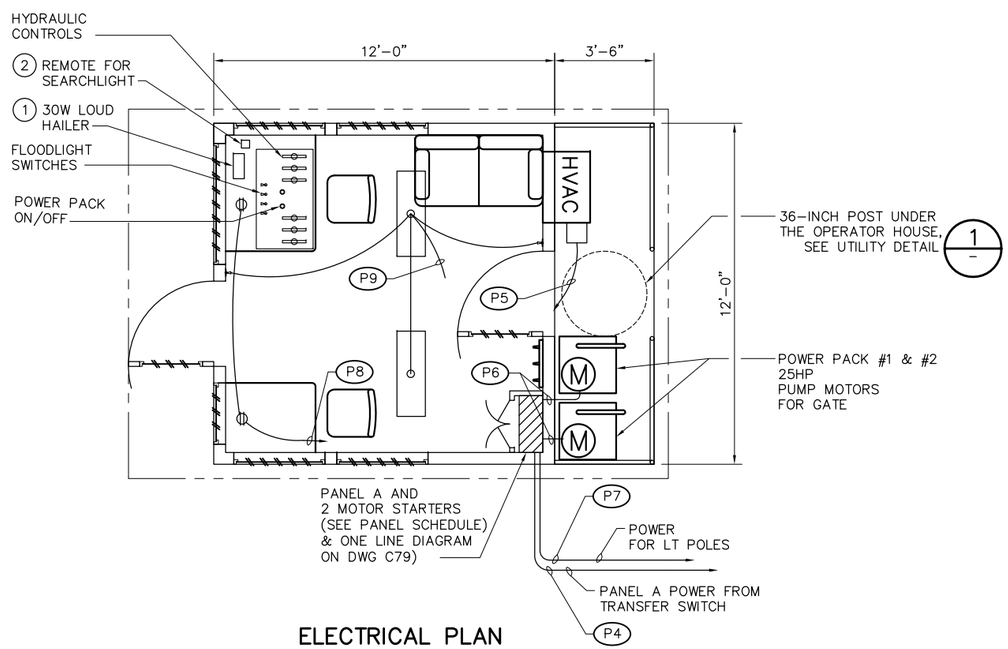

ELECTRICAL PLAN

SCALE: 3/8" = 1'-0"

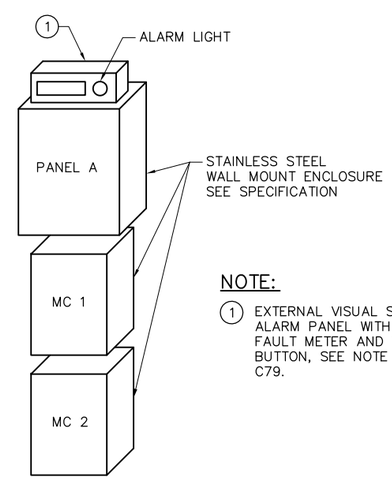

NOTE:

1. EXTERNAL VISUAL SIGNAL LIGHT ALARM PANEL WITH GROUND FAULT METER AND TEST RESET BUTTON, SEE NOTE 9 ON DWG C79.

ELECTRICAL CABINET ARRANGEMENT

NTS

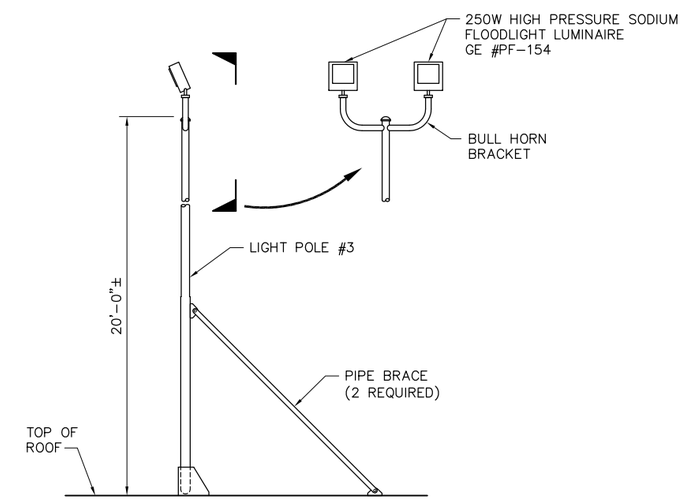

2/C13 FOLD-DOWN LIGHT POLE DETAIL

NTS

C41

100% SUBMITTAL REVISION 1

IF SHEET IS LESS THAN 22" x 34" IT IS A REDUCED PRINT – SCALE REDUCED ACCORDINGLY.

REVISION	DESCRIPTION	BY	DATE

San Luis & Delta-Mendota Water Authority
842 6th Street, Suite 7
PO Box 2157
Los Banos, California 93635

Moffatt & Nichol
2001 N. Main Street, Suite 360
Walnut Creek, California 94596
(925) 944-5411

DSGN	DR	CHK
CBS	AB/EP	TDB
JOB NO. 6097-03	SUBMITTED BY RMR	

2-GATES FISH PROTECTION DEMONSTRATION PROJECT

DATE 10/02/09

SHEET 74 OF 78

OPERATOR HOUSE EQUIPMENT AND DETAILS

C78

P:\6097-03 SWC GATE DESIGN\CADD\DWG\609703-C78.DWG 10/1/2009 9:36 AM

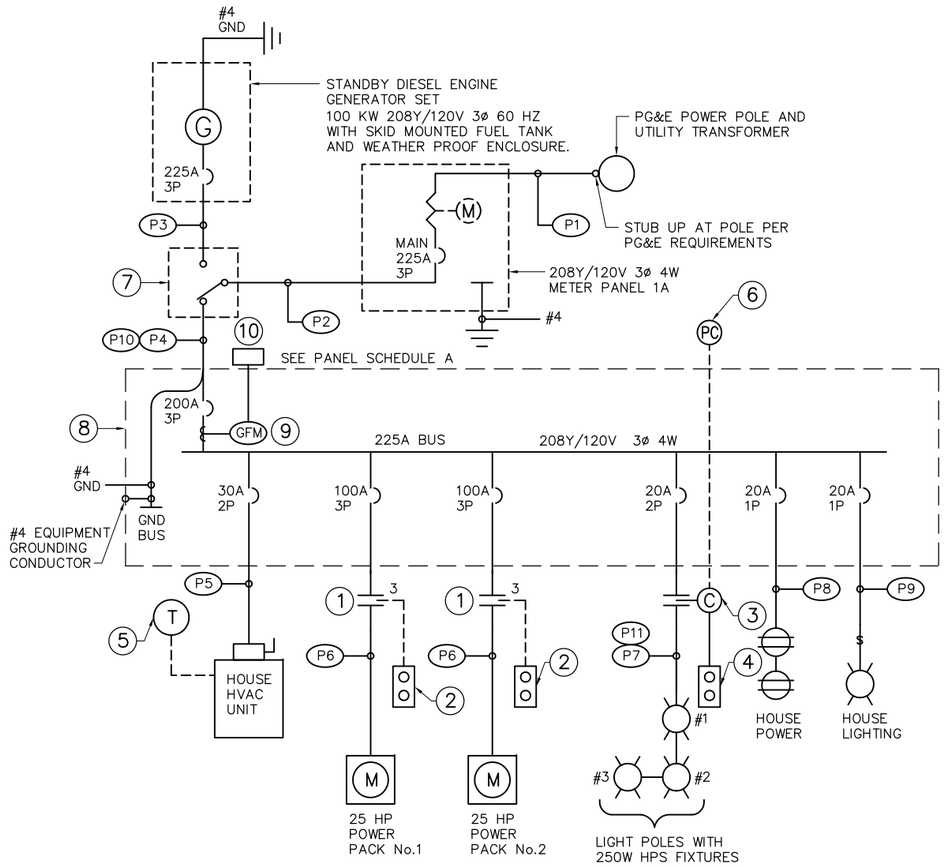

ONE LINE DIAGRAM

N.T.S.

NOTES:

1. NEMA SIZE 3 COMBINATION MOTOR STARTER
2. POWER PACK ON/OFF CONTROL IN OPERATOR HOUSE
3. 30A LIGHTING CONTACTOR
4. FLOOD LIGHT CONTROL. HAND OFF AUTO IN OPERATOR HOUSE
5. THERMOSTAT CONTROL IN OPERATOR HOUSE
6. PHOTO CELL LOCATED ON TOP OF OPERATOR HOUSE
7. 225A – 4W 208Y/120V 3PH. 4 POLE NONAUTOMATIC TRANSFER SWITCH IN A NEMA 3R ENCLOSURE
8. PANEL "A" LOCATED IN OPERATOR HOUSE
9. GROUND FAULT MONITOR CAT NO. RCM470LY BY BENDER WITH CT's SIZED TO ACCEPT FEEDER CABLES AND AN EXTERNAL VISUAL SIGNAL LIGHT ALARM PANEL WITH GROUND FAULT METER
10. EXTERNAL ALARM PANEL FOR GROUND FAULT MONITOR

GENERAL NOTES:

1. ALL EQUIPMENT METAL PARTS SHALL BE BONDED WITH A CODE SIZE GROUND CONDUCTOR.
2. EQUIPMENT SHALL NOT BE GROUNDED TO THE BARGE HULL.

PANEL: A

LOCATION : CONTROL HOUSE | **VOLTAGE/PHASE :** 208Y/120V, 3Ø, 4W | **FED FROM :** PANEL 1A

MOUNTING : SURFACE | **BUS AMPS :** 225A | **MINIMUM BUS BRACING :** 10 KA

MAIN BREAKER : 200A 3P

LOADS	SEE NOTE	OUTLETS LTG	OUTLETS REC	OUTLETS MISC	VOLT-AMPS A	VOLT-AMPS B	VOLT-AMPS C	CKT	BKR/ POLE	A B C	BKR/ POLE	CKT	VOLT-AMPS A	VOLT-AMPS B	VOLT-AMPS C	OUTLETS MISC	OUTLETS REC	OUTLETS LTG	SEE NOTE	LOADS
POWER PACK #1	1			1	9360			1	100/3	*--------	20/2	2	500					4	2	OUT SIDE LIGHTS
25 HP MOTOR						9360		3	.	----*----	.	4		500						
							9360	5	.	--------*	20/1	6			720		2			HOUSE RECEPT
POWER PACK #2	1			1	9360			7	100/3	*--------	20/1	8	200					2		HOUSE LIGHTS
25 HP MOTOR						9360		9	.	----*----		10								SPACE
							9360	11	.	--------*		12								SPACE
HOUSE				1	2000			13	30/2	*--------		14								SPACE
HVAC UNIT						2000		15	.	----*----		16								SPACE
SPARE								17	20/1	--------*		18								SPACE
SPARE								19	20/1	*--------		20								SPACE
SPARE								21	20/1	----*----		22								SPACE
SPARE								23	20/1	--------*		24								SPACE

TOTAL ØA = 21420 VOLT-AMPS
TOTAL ØB = 21220 VOLT-AMPS
TOTAL ØC = 19440 VOLT-AMPS
LCL = 300 VOLT-AMPS

TOTAL = 62380 VA @ 208V, 3Ø 173.3 AMPS

NOTES: 1. CONTROLED BY SIZE 3 MOTOR STARTER
2. CONTROLED BY PHOTOCELL AND HAND-OFF-AUTO SWITCH

CONDUIT AND FEEDER SCHEDULE

	CONDUIT	CONDUCTOR	REMARKS
P1	3" PVC	PULL ROPE	CONDUCTORS BY PG&E
P2	3" PVC	4 #4/0 & 1 #4 GND	TO TRANSFER SWITCH
P3	3" PVC	4 #4/0 & 1 #4 GND	TO TRANSFER SWITCH
P4	3" PVC	4 #4/0 & 1 #4 GND	SURVING PANEL A
P5	1" PVC	2 #10 & 1 #4 GND	HVAC
P6	1 1/4" PVC	3 #2 & 1 #2 GND	POWER PACK #1 & #2
P7	1" PVC	2 #8 & 1 #8 GND	AREA LIGHTING
P8	1/2" PVC	2 #12 & 1 #12 GND	HOUSE POWER
P9	1/2" PVC	2 #12 & 1 #12 GND	HOUSE LIGHTING
* P10	–	4 #4/0 & 1 #4 GND	OVERHEAD CABLE
* P11	–	2 #1/0 & 1 #1/0 NET	OVERHEAD CABLE

* PAC 600V PARALLEL AERIAL CABLE ALUMINUM HD POLY 75° C.

100% SUBMITTAL REVISION 1

IF SHEET IS LESS THAN 22" x 34" IT IS A REDUCED PRINT – SCALE REDUCED ACCORDINGLY.

REVISION	DESCRIPTION	BY	DATE

San Luis & Delta-Mendota Water Authority
842 6th Street, Suite 7
PO Box 2157
Los Banos, California 93635

Moffatt & Nichol
2001 N. Main Street, Suite 360
Walnut Creek, California 94596
(925) 944-5411

DSGN	DR	CHK
DM	AB/EP	CBS
JOB NO. 6097-03	SUBMITTED BY RMR	

2-GATES FISH PROTECTION DEMONSTRATION PROJECT

DATE 10/02/09

SHEET 75 OF 78

ELECTRICAL SYSTEM DIAGRAM

C79

P:\6097-03 SWC GATE DESIGN\CADD\DWG\609703-C79.DWG 10/1/2009 9:34 AM

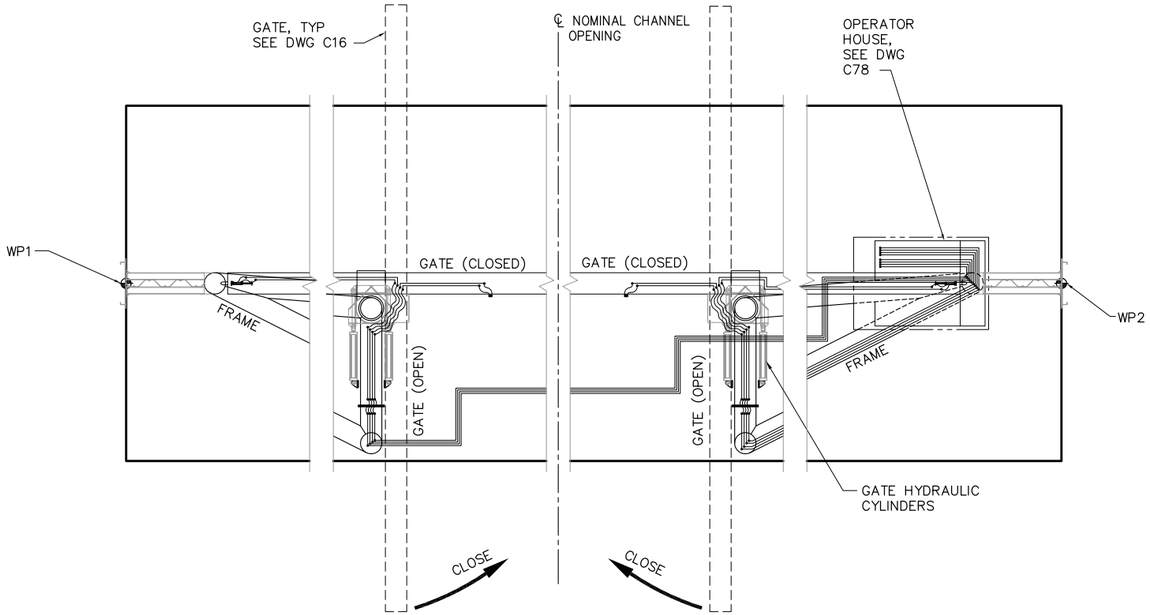

GATE LOCKING HYDRAULIC DIAGRAM

SCALE: 3/32"= 1'-0"

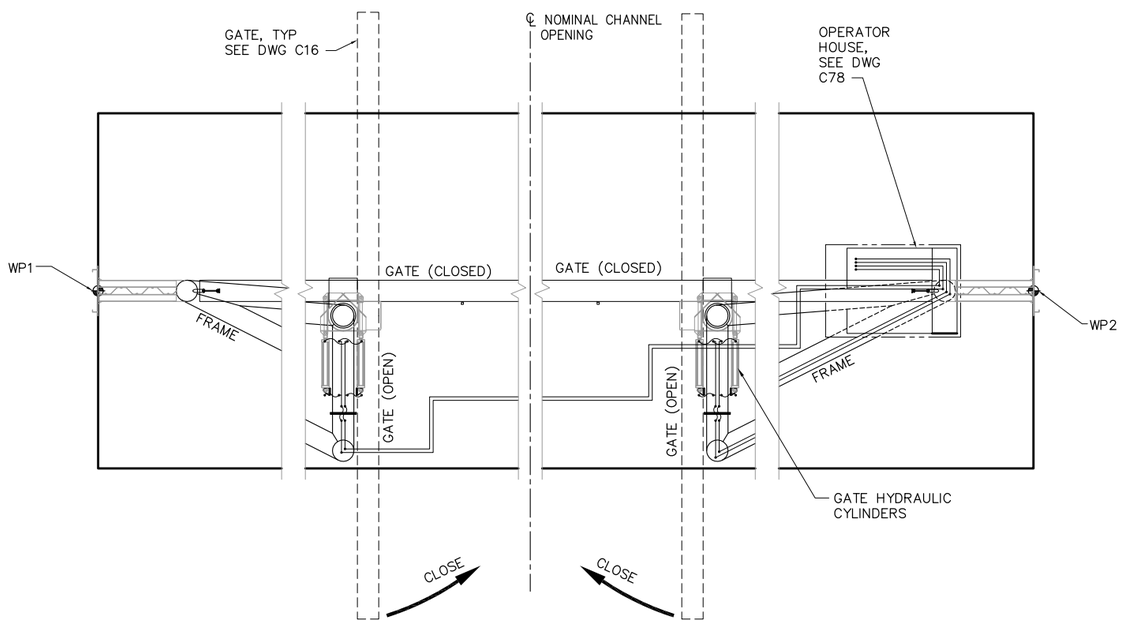

GATE OPERATOR HYDRAULIC DIAGRAM

SCALE: 3/32"= 1'-0"

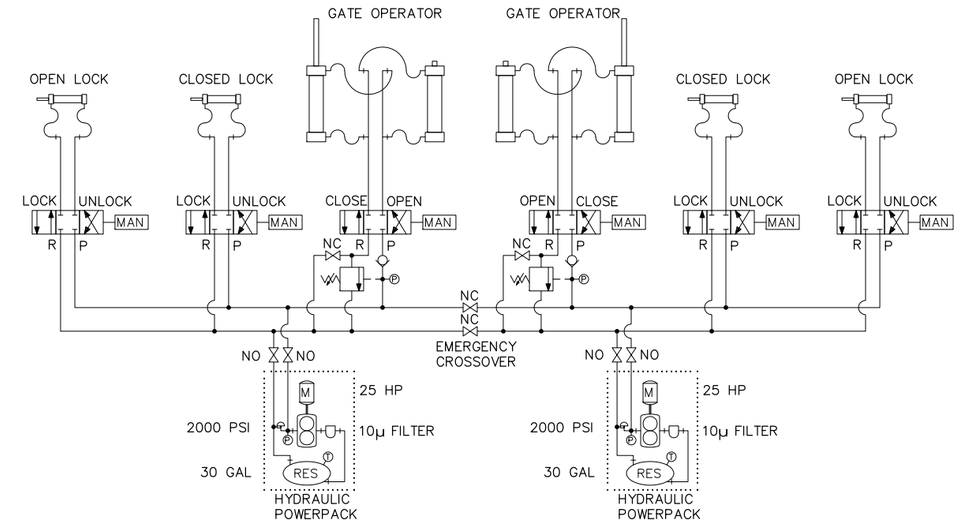

HYDRAULIC SYSTEM SCHEMATIC

NTS

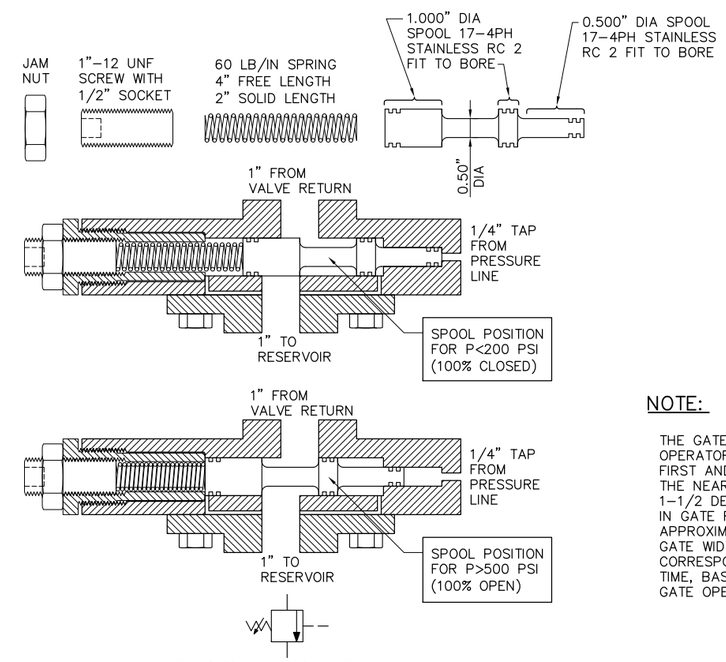

TYPICAL BRAKE VALVE

(EXTERNALLY PILOTED COUNTERBALANCE VALVE)

NTS

NOTE:

THE GATE FARTHEST FROM THE OPERATOR HOUSE MUST BEGIN OPENING FIRST AND CLOSE SLIGHTLY LATER THAN THE NEAR GATE WITH APPROXIMATELY 1-1/2 DEGREES MAXIMUM DIFFERENCE IN GATE ROTATION. (1-1/2 DEGREES IS APPROXIMATELY ONE-HALF OF THE GATE WIDTH LEAD OR LAG, AND CORRESPONDS TO A 4 SECOND DELAY TIME, BASED ON A 4 MINUTE TOTAL GATE OPENING TIME.)

100% SUBMITTAL REVISION 1

IF SHEET IS LESS THAN 22" x 34" IT IS A REDUCED PRINT – SCALE REDUCED ACCORDINGLY.

REVISION	DESCRIPTION	BY	DATE

San Luis & Delta-Mendota Water Authority
842 6th Street, Suite 7
PO Box 2157
Los Banos, California 93635

Moffatt & Nichol
2001 N. Main Street, Suite 360
Walnut Creek, California 94596
(925) 944-5411

DSGN	DR	CHK
CBS	AB	TDB
JOB NO. 6097-03	SUBMITTED BY RMR	

2-GATES FISH PROTECTION DEMONSTRATION PROJECT

HYDRAULICS SYSTEM DIAGRAM

DATE 10/02/09

SHEET 76 OF 78

C80

P:\6097-03 SWC GATE DESIGN\CADD\DWG\609703-C80.DWG 9/1/2009 10:44 AM

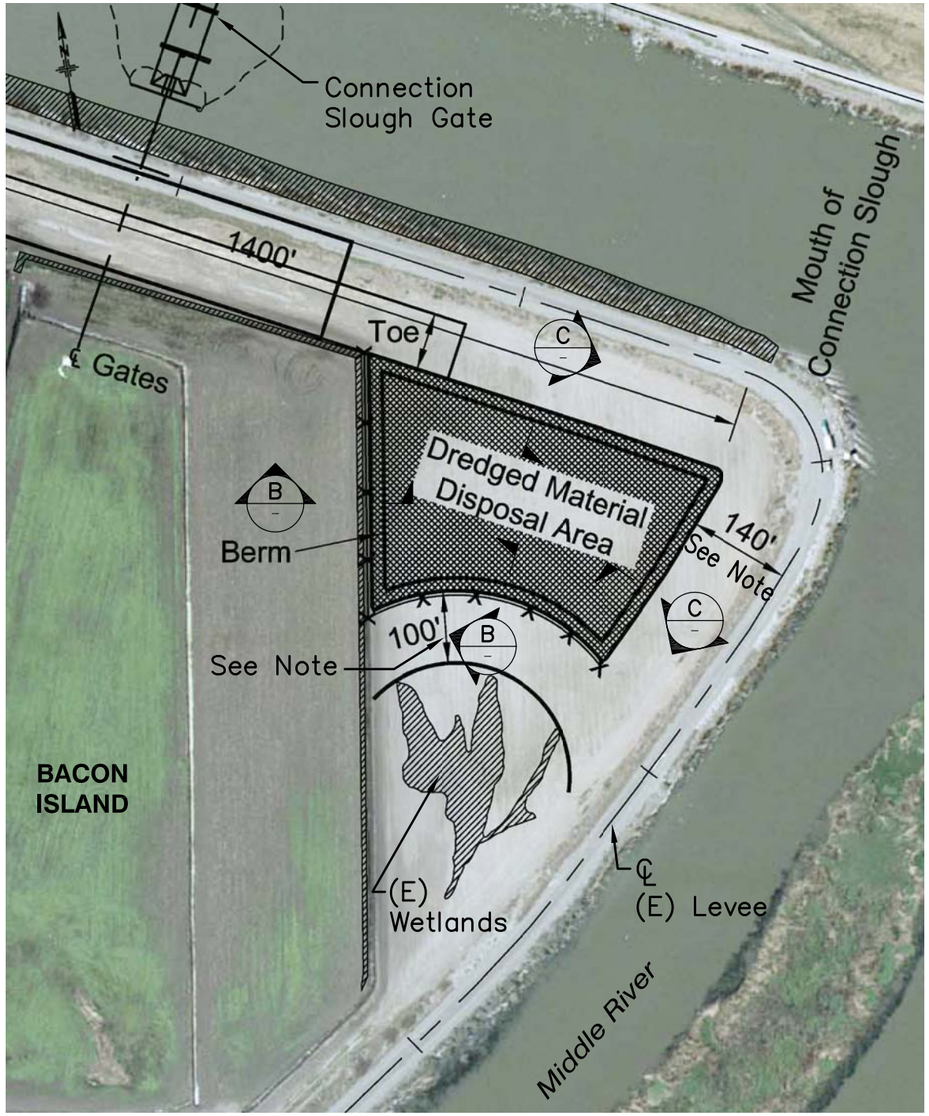

A — DISPOSAL SITE PLAN
NTS
NOTE: SEE DWG G4 FOR LOCATION.

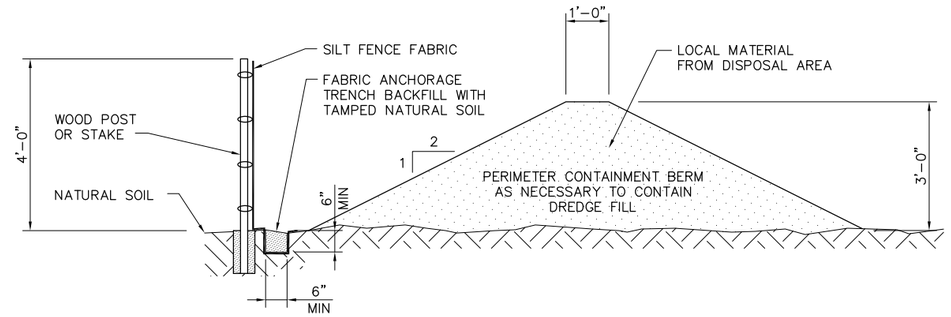

B — SECTION
SCALE: NONE

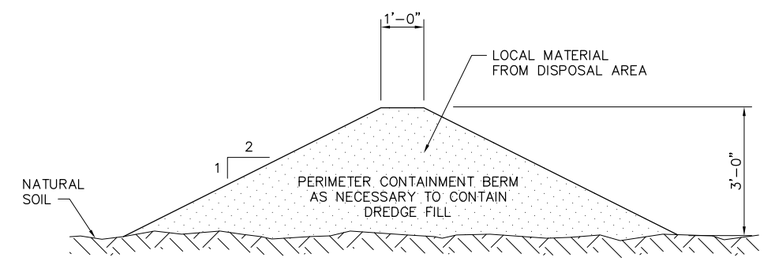

C — SECTION
SCALE: NONE

NOTE:

NO DREDGE MATERIAL SHALL BE PLACED WITHIN 140' OF THE LEVEE CENTERLINE AND 100' OF THE WETLANDS.

100% SUBMITTAL REVISION 1

IF SHEET IS LESS THAN 22" x 34" IT IS A REDUCED PRINT – SCALE REDUCED ACCORDINGLY.

REVISION	DESCRIPTION	BY	DATE

San Luis & Delta-Mendota Water Authority
842 6th Street, Suite 7
PO Box 2157
Los Banos, California 93635

Moffatt & Nichol
2001 N. Main Street, Suite 360
Walnut Creek, California 94596
(925) 944-5411

DSGN	DR	CHK
TDB	TAE/AB	GTH
JOB NO. 6097-03	SUBMITTED BY RMR	

2-GATES FISH PROTECTION DEMONSTRATION PROJECT

DATE 10/02/09

SHEET 77 OF 78

DREDGED MATERIAL DISPOSAL SITE

C81

P:\6097-03 SWC GATE DESIGN\CADD\DWG\609703-C81.DWG 9/28/2009 10:40 AM

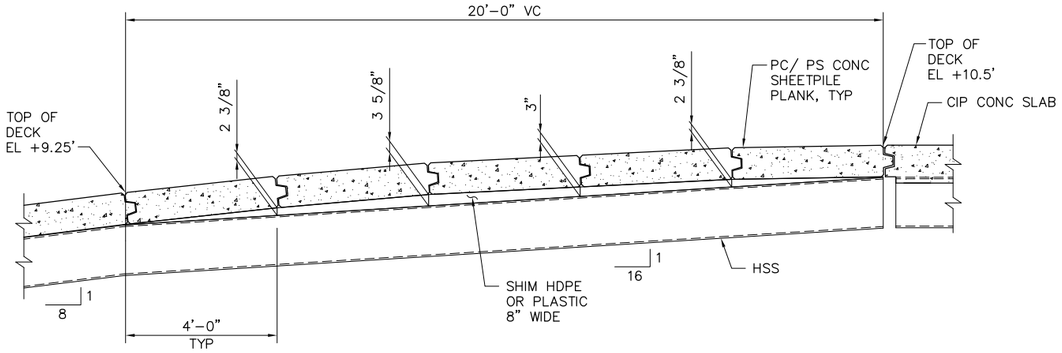

1 / C7 **DETAIL**
SCALE: 1/2"=1'-0"
C36

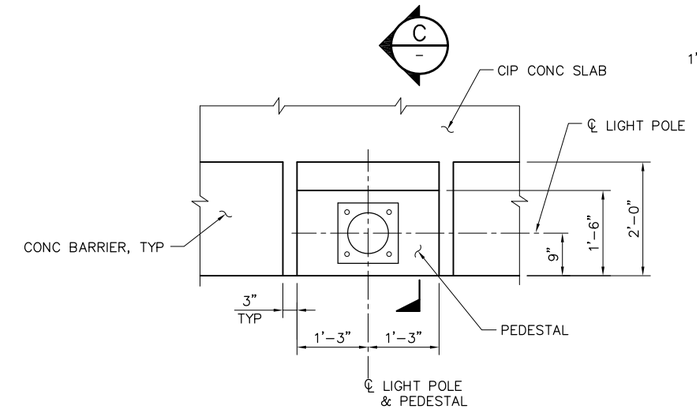

3 / C39 **DETAIL**
SCALE: 3/4" = 1'-0"
C8

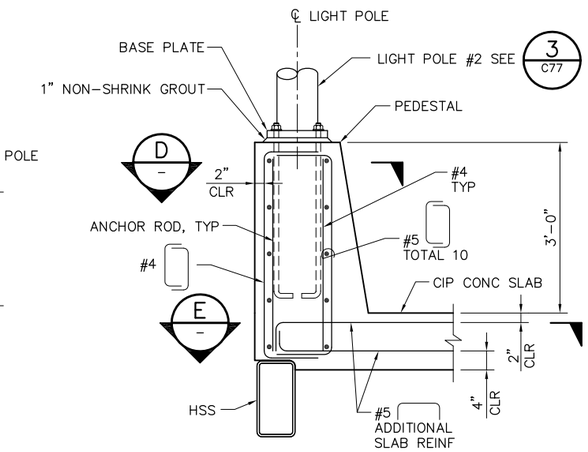

C / – **SECTION**
SCALE: 3/4" = 1'-0"

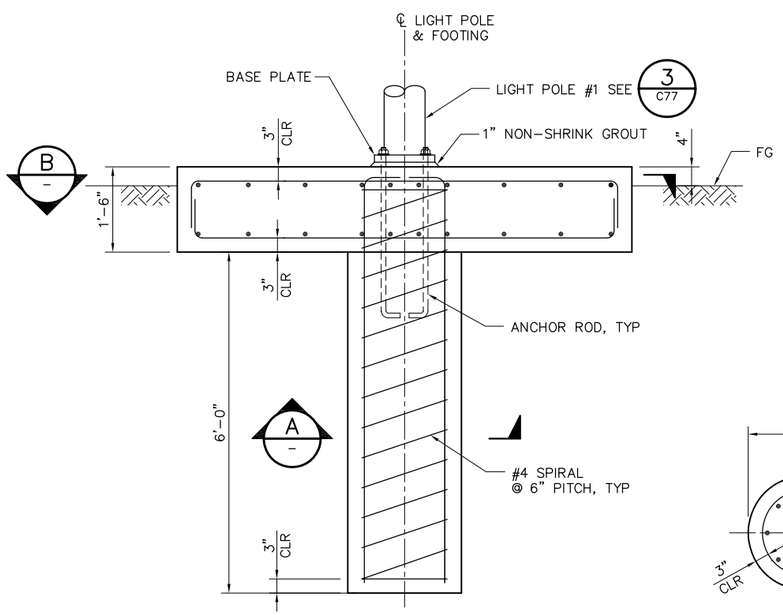

2 / C77 **DETAIL**
SCALE: 3/4" = 1'-0"

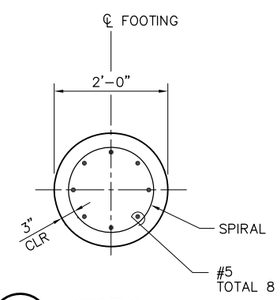

A / – **SECTION**
SCALE: 3/4" = 1'-0"

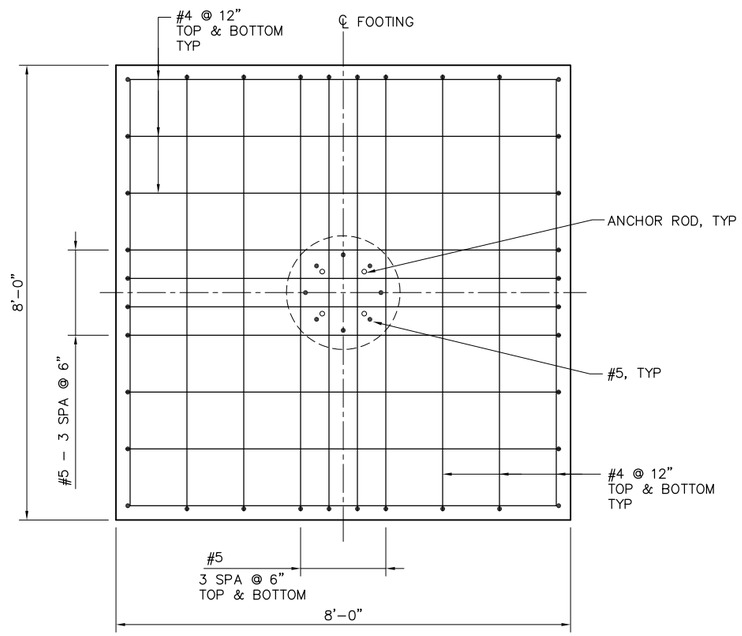

B / – **SECTION**
SCALE: 3/4" = 1'-0"

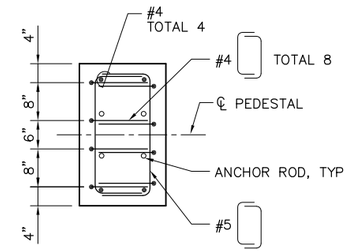

D / – **SECTION**
SCALE: 3/4" = 1'-0"

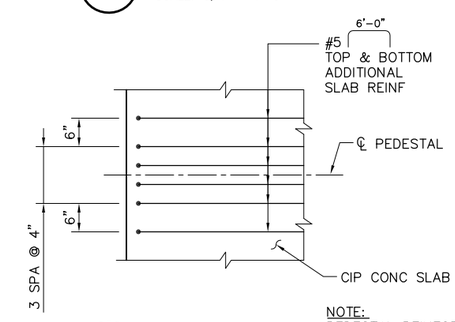

NOTE:
PEDESTAL REINFORCEMENT NOT SHOWN FOR CLARITY.

E / – **SECTION**
SCALE: 3/4" = 1'-0"

2'-0" 0'-0" 1'-0" 2'-0"
SCALE: 3/4"=1'-0"

100% SUBMITTAL REVISION 1

IF SHEET IS LESS THAN 22" x 34" IT IS A REDUCED PRINT – SCALE REDUCED ACCORDINGLY.

REVISION	DESCRIPTION	BY	DATE

San Luis & Delta-Mendota Water Authority
842 6th Street, Suite 7
PO Box 2157
Los Banos, California 93635

Moffatt & Nichol
2001 N. Main Street, Suite 360
Walnut Creek, California 94596
(925) 944-5411

DSGN	DR	CHK
JMB	EP	TDB
JOB NO. 6097-03	SUBMITTED BY RMR	

2-GATES FISH PROTECTION DEMONSTRATION PROJECT

MISCELLANEOUS DETAILS

DATE 10/02/09

SHEET 78 OF 78

C82

P:\6097-03 SWC GATE DESIGN\CADD\DWG\609703-C82.DWG 9/29/2009 3:57 PM